SINCERITY

Beijing Sincerity Automatic Equipment CO., LTD

DMF-1-CR Insertion Density Meter

Address: Block A,Territory Office, Chaoyang District, Beijing, China
Tel: +86 (010) 52073959
Phone/ whatsapp: +86 18600270515
Email: bjsincerity_zoe@163.com
Fax: +86 (010) 52073954
Zip Code: 100107
Website: http://www.bjssae.com

SINCERITY

Thank you for choosing Beijing Sincerity

Your Satisfaction Our Priority

We address your concerns and find you solution.

Beijing Sincerity Automatic Equipment CO., LTD is Joint Venture, reformed from Sinopec and Capital technology group in 1999, specializing in the product lines of Coriolis mass flow meter, density meter; to undertake and to measure related to the automatic control, loading and unloading control system. Beijing Sincerity continuously invests in research and development to keep our products with cutting-edge technology. We dedicate to find the best solution to meet the customer's need, with more focused design we reset the bar for what reliability means in the industry. Our products have been widely used in petrochemical, metallurgical, mining (both stone and sand), pharmaceuticals, construction materials, food industry, aircraft, marine construction, reservoir loading and unloading docks, etc.

Company Continuously Pursuits

Efficient customer responses: 24/7 to serve our valuable customer with efficient solution.

We listen to your issue and we find you suitable solution to meet and exceed your expectation.

Quality control system: Each process during manufacturing can be traced, to ensure our high performance products in your hands

Please let us know your challenge...

SINCERITY

Beijing Sincerity will provide you the perfect solution to your problems. We shall provide you with the most suitable product and most up to date technology to support your demands.

DMF-1-CR Density Meter

SINCERITY

Content

Tel: +86 010 52073959/+86 18600270515 Email: bjsincerity_zoe@163.com

Introduction

1/ Application

DMF-1-CR insertion density meter could apply on-line density testing. It could be applied in the product process controlling based on the basic parameters of density, or the mass controlling system as the solid percentage or concentration for references.

Typical industries include petroleum chemical industry, wine industry, food industry, pharmaceutical industry and mining industry, (for example clay, carbonate carbon, silicate, etc.). The insertion density meters are applied in pipeline detection of multiple medium of the industries listed above, density testing of the stirred mixture, the reaction kettle end monitoring, and the separation interface detection.

2/ Characteristics

DMF-1-CR density meter fully integrates digital density measurement for monitoring and control; Capable of direct insertion into large bore pipe work applications, substantially reducing the installation cost compared to flow through devices.

3/ Technical Parameter

Density Range	0.5-2.5g/cm³(500-2500kg/m³)，other density range can be special ordered
Measurement Accuracy	±0.002g/cm³(±2 kg/m³)；±0.001g/cm³(±1 kg/m³)
Repeatability	±0.0002g/cm³(±0.2 kg/m³)
Temperature Range (Process)	-20～+200 Degree Celsius(□)，other temperature range can be specially ordered
Pressure Rating	0-4MPa，other pressure range can be special ordered
Viscosity Range	0-20000 cP
Temperature Effect	Less than 0.1kg/m³/□(After Calibration)
Impact from Pressure	Negligible
Built-in Temperature Sensor	PT100
Tine Finish	Standard，PFA coated，or Electro-polished
Power Supply	24VDC，≥500 mA/ 220VAC
Analog Output	4-20mA，0-1000Hz，RS485 Modbus RTU
Density Accuracy-process(20□)	±0.1% or±0.05% FS of indicated figures
Repeatability-process(-40～85□)	±0.05% FS
Process Connection	Flange，chuck connection，etc. Other connection can be special ordered
Protection Grade	IP67
Explosion Proof	EX d II B T5 Gb
Housing Material	Aluminum alloy

Tel: +86 010 52073959/+86 18600270515 Email: bjsincerity_zoe@163.com

Example of Application

Environmental Protection Industry

Petroleum Industry

Pharmaceutical Industry

Vehicle Mounting

Chemical Industry

Food Industry

Mechanical Installation

1/ Demonstration of tubes installation

To ensure the stability and the accuracy, the flow velocity of the liquid should not be higher than 1.5m/s. and the diameter of the installed pipeline is required to be ≥150mm, (equal to or greater than 150mm). In addition, the position of the installed insertion density meter should be away from the pump as far as possible. The distance is advised to be greater than 5m.

The length of the straight pipe in front of the insertion density meter is required to be ≥600 mm. And the length of the straight pipe behind the installation of the insertion density meter is required to be ≥300 mm. In order to make sure the liquid is as the laminar flow state when flowing through the fork of the insertion density meter.

a.Horizontal Pipeline Installation

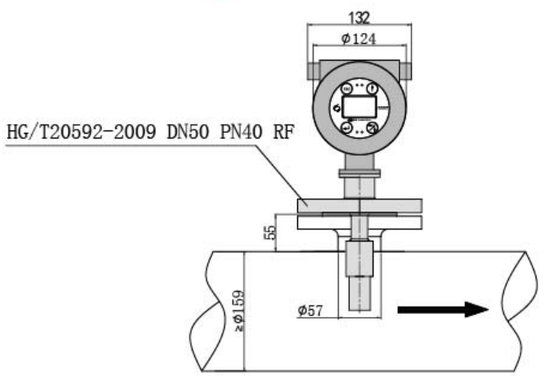

(a)

b.Vertical Pipeline Installation (b.1) Flow Velocity ≤1.5m/s

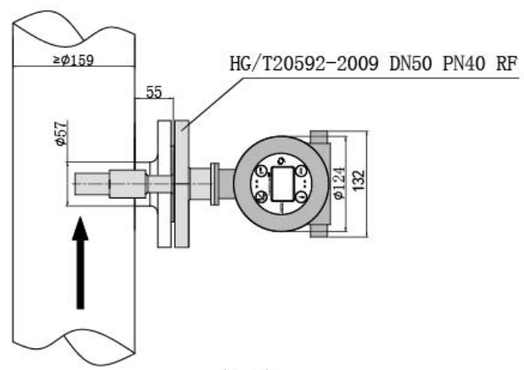

(b.1)

Vertical Pipeline Installation (b.2) Flow Velocity ≥1.5m/s and Desulfurization

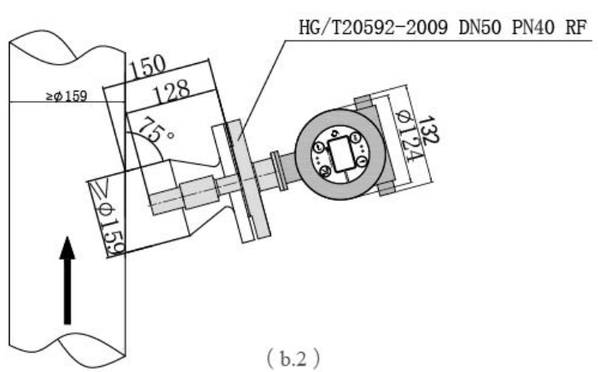

(b.2)

c.Tank Installation

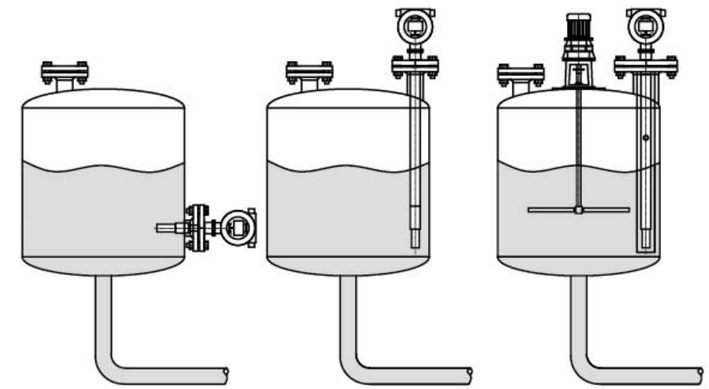

c.1 c.2 c.3

c.1: For the tank side mounting without stirring
c.2: For the tank top mounting without stirring
c.3: For the tank top mounting with stirring

2/ Dimensions of Density Meter

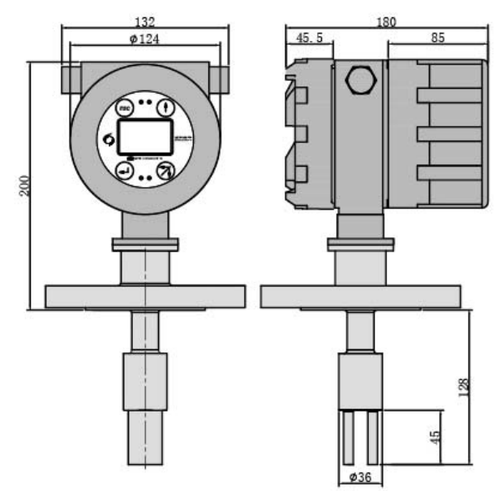

(d)

Electrical Installation

1/ Introduction

DMF-1-CR adapts 4-wired design, output with 4-20mA and 0-1000Hz, providing Standard MODBUS RTU digital connection. Outputs of electricity and frequency can be stored in the system. Software can be selected for particular condition of density, temperature, mass percentage or volume percentage. The diagram shown below illustrates the structure of the electrical system:

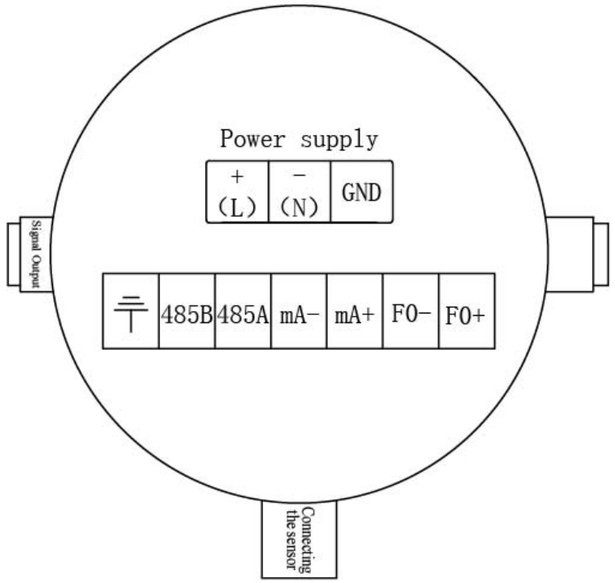

2/ Wiring Instructions

+ (L) /- (N)	24VDC power supply (>50mA) Or 220VAC (It is required to confirm before order)
Fo+\–	frequency output 0-1000 Hz (temperature/ density/ ingredient percentage-optional adjustment)
mA+\–	electricity output 4-20 mA (temperature/ density/ ingredient percentage-optional adjustment)
485A\485B	RS-485 contact（Baud rate：“9600”，address：set as“1”)
GND	Signal shielding
⏚	Housing ground

An identical power supply can be shared by multi-installed meters. To prevent electricity usage overloaded, a separated power supply can be considered.

Instruction Guidance

※ The buttons of the transmitter are all touch screen. Any instructions could be finished through the touch screen, thus it is not required to open the cover.
※ Detailed instructions are listed as below:

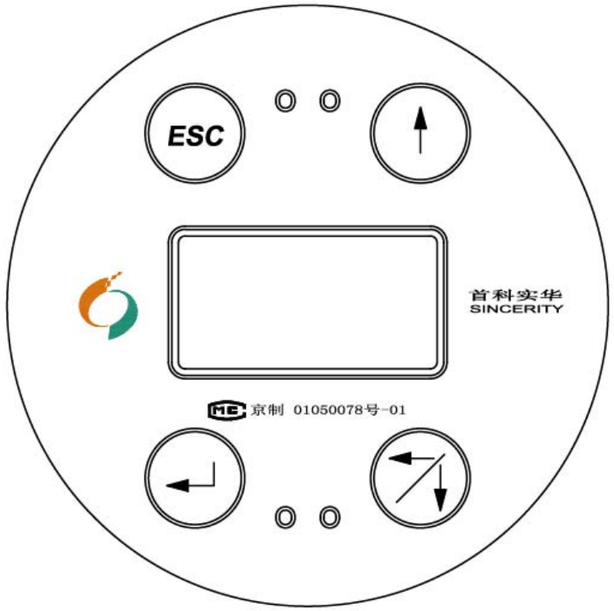

1.Touch ↑ or ⇄ to switch the two function interfaces;

2.Touch ↵ to enter the “Password” interface. Then touch ⇄ to change the decimal point, and touch ↑ to scroll the number to 20. And touch ↵ to enter the Menu interface. In this interface, you could touch ESC to get back to previous interface. Or you could touch ↵ to enter the next interface if needed.

1)Enter the “Records” interface, the detailed information of the module and the serial number of the density meter is shown. Touch ESC to get back to the “Menu”.

2)In the section of preference adjustment, selecting options by obstructing ↑ and ⇄ arrow key and ↵ to enter into the particular sector. Setting can be adjusted by ↑ and ⇄ function key, and confirming and saving changes by obstructing ↵ key. Alternatively, obstructing “ESC key to quit preference setting. A detailed demonstration is listed below:

a)“Density Unit”：to select the unit type displaying in system（density unit includes：lb/gal、g/cc、kg/m^3、lb/ft^3）；

b)“Temp. Unit”: to select the unit type displaying in system (temperature unit includes: ℃, ℉) ;

c)“Frequency”: the most suitable functioning modes can be selected according to the level of frequency output (1.density: frequency output changes as the density of measuring liquid varies; 2.temperature: frequency output changes as the temperature of measuring liquid varies; 3.V/V: frequency output changes as the mass ratio of measuring liquid varies; 4.m/m: frequency output changes as the mass ratio of measuring liquid varies) ;

d)“Current”: the most suitable functioning modes can be selected according to the level of electricity output (1.density: electricity output changes as the density of measuring liquid varies; 2.temperature: electricity output changes as the temperature of measuring liquid varies; 3.V/V: electricity output changes as the mass ratio of measuring liquid varies; 4.m/m: electricity output changes as the mass ratio of measuring liquid varies) ;

e)“Response Time”: screen refresh rate can be set in the preference setting section;

f)“Light”: screen light can be altered, and brightness can be tuned on the preference setting section;

g)“Part A Density”: specific in multi-measurements;

h)“Part B Density”: specific in multi-measurements;

i)“Component %”: can be set in general setting preference section (1.V/V volume ratio; 2.m/m mass ratio) ;

j)“Reset”: setting can be default as original setting;

k)“Address”: address used for communication via RS485, defaulted setting as“1”;

l)“Baud rate”: Baud rate used for communication via RS485, defaulted setting as“9600”;

m)“Communication Protocol”: advised to adjust the communication setting of RS485 as standard Modbus RTU to match with Sincerity’s CRC compatibility.;

3) In the section of “Output Test”, frequency output and electricity output can be measured. Enter setting mode by obstructing key, and adjusting figures by using arrow key. (advised setting for each level of frequency output: 0%--0Hz; 25%--250Hz; 50%--500Hz; 75%--750Hz; 100%--1000Hz; advised setting for each level of electricity output: 0%--4mA; 25%--8mA; 50%--12mA; 75%--16mA; 100%--20mA) ,Obstructing the “ESC” key to return to main menu;

4) The “Calibration” section enables more suitable preference setting according to the particular operating conditions(It would be strongly recommended for new installed density meter.) In the case of measuring known-density liquid, users can store the data into system by setting the density with and arrow keys. Density meter will start auto-customizing after confirmed setting by obstructing key. A notification of “saving changes in progress” will be shown on the screen to enable users to check the status. Moreover, stored data of liquid density will not be erased until next new auto-tuning.

Manual of Modbus RTU

NO.	Holding register	Address(16/10 Bit)	Definition	Note
1	41001	0x03E8 / 1000	density	
2	41003	0x03EA / 1002	temperature	
3	41005	0x03EC / 1004	Frequency rate	
4	41007	0x03EE / 1006	Adjusted frequency rate	
5	41009	0x03F0 / 1008	Contains of measurement A	

Demonstration:

1. To prevent unnecessary issues, which might occur, editing the address information is not recommended
2. Default setting for communication setting:

Data bit: 8

Stop bit: 1

Check: None

Baud rate: 9600

Station: 1

Protocol: Modbus RTU

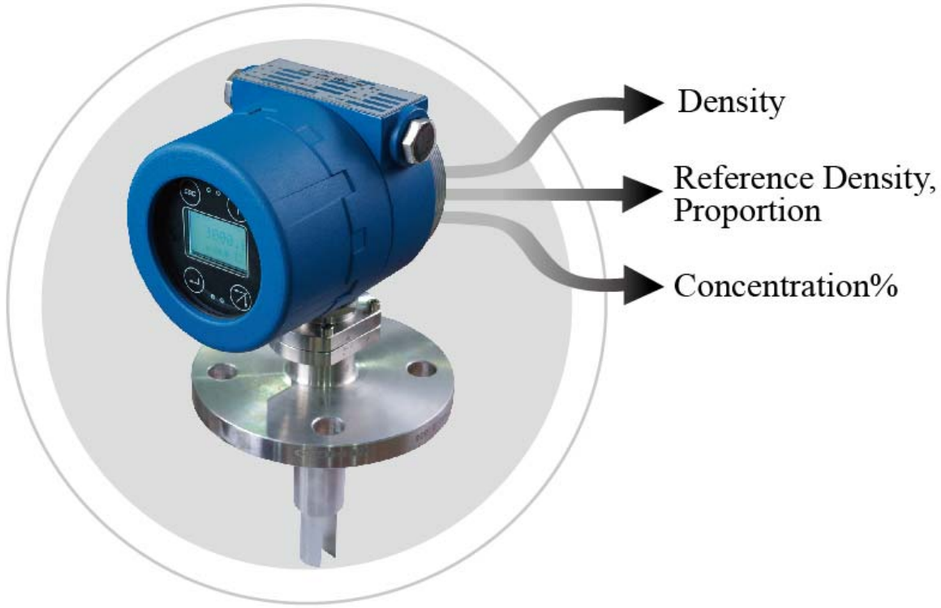

Precautions

※ Do not cause any physical damage to the meter.
※ Maintain the meter in its original package. For the long-stem meters, ensure the transit cover secured by the grub screws.

◆ Incorrect Installation

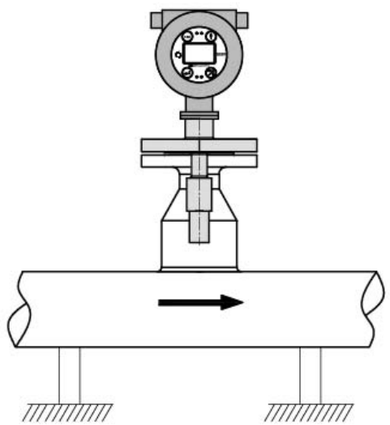

(e)

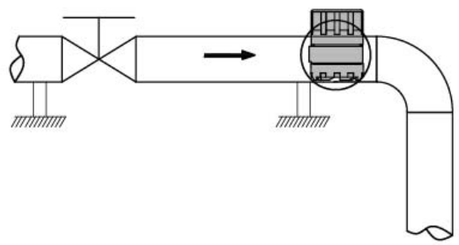

(f)

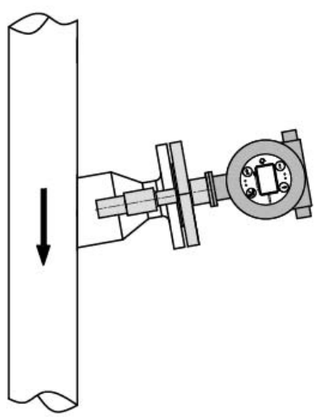

(g)

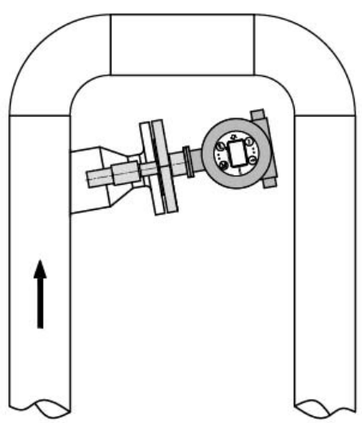

(h)

Model Selection Guidance

Code: CR	Product: DMF-1-CR Insertion Density Meter
Code	**Fork Material**
A	SS 316L
B	HC Hastelloy
C	SS316L with PTFE
D	HC Hastelloy with PTFE
Code	**Output**
E	4-20mA 0-1000Hz RS485 Modbus RTU
Code	**Power Supply**
A	24VDC
B	220VAC
Code	**Transmitter Casing Material**
F	Aluminium Alloy
Code	**Pressure Class**
16	1.6MPa
40	4.0MPa
XXX	Special pressure can be ordered
Code	**Process Connection**
A	DN50 HG/T 20592-2009 RF
B	Chuck Connection
XXX	Special setting connection can be ordered
Code	**Length**
128	Standard 128mm
XXX	Special length can be ordered
Code	**Extension Pipeline Material**
A	Without extension pipeline
B	SS 316L
C	HC Hastelloy
D	SS 316L with PTFE
E	HC Hastelloy with PTFE
Code	**Flange Material**
A	SS 316L
B	HC Hastelloy
C	SS 316L with PTFE
D	HC Hastelloy with PTFE
Code	**Installation Method**
A(XX)	Horizontal Pipeline (XX:Pipeline Size)
B(XX)	Vertical Pipeline (XX:Pipeline Size)
C	Tank Installation
D	Other installation method can be special ordered
Code	**Factory Setting**
G	Factory Setting Options

CR	A	E	A	F	16	A	128	A	A	A	G	Ordering Information

Performances

Baogang Group	Harbin Electric Corporation	Fengbao Industry	China Huadian Corporation	Anfeng Iron and Steel
Nine Dragons Paper (Holdings) Limited	Aluminum Corporation Of China Limited	Panzhihua Iron & Steel (Group)	Zhangze Group	Baosteel
Shenhua Group	Rockneck Group	Northwest Electric Power Design Institute Co., Ltd.Of China Power Engineering Consulting Group	China Guodian Corporation	Jinan Heating Power Corporation
CEEP (CEC Environmental protection Co., Ltd	Anhui Zhongrun Cable Group Shares Co., Ltd	Datong Holdings	Hitech	Stocsis Ecosystem
Junhe Environmental Protection	KSL Automation system engineering	Olive	Yangzhou kanglong Environmental protection Co., LTD	Sinochem Lantian group

Chinastone	JiangSu XinHe Agricultural chemical Co., LtD	Shandong Fluorine Chemical Co., Ltd.	Hurxing Group	Trevo
Shandong MinJi chemical Co., Ltd	Wochi Chemical Group	Wochi Chemical Group	Yankuang Group	Shandong yuangen Petroleum chemical
Polygrand Chemical	Zhejiang huangma group	Zhejian Jiahua Energy Chemical Indutry Co., Ltd	Sinopec Beijing Yanshan Company	Shandong Dairuike New Material
Shandong Xiaosong Oil	Shandong Xinhua Pharmaceutical Co., LTD	Yuwang Group	Shandong Yun Neng Catalytic Technology Co., Ltd	Zhenghe Group
Anhui Jucheng Fine Chemicals Co., LTD	Hunan zhongchuang chemical co., ltd	Tenglong Group	Shangdong Dadi Salt Chemical Group Co.,Ltd	Shandong Jinjing Glass Group