Product Features:

1. Integrated structure design, simple appearance, not only the simplicity of UFO, but also the lampshade of traditional mining lamp;

2. The industrial aluminum material with high corrosion resistance and high thermal conductivity is used, and the cold forging process is integrated in one piece, with precision plasticity, plus black spraying, which has a large heat dissipation area and good heat dissipation effect;

3. The whole lamp electrophoresis process, the product has excellent anti-corrosion and anti-rust functions to adapt to a variety of working environments; structure waterproof design, product protection level can reach IP66.

4. 60 °, 90 ° and 110 ° lenses can be selected. The lens is made of high-quality imported PC material, with high light transmittance, flame retardant and wear resistance, and UV resistance. Professional light distribution can meet different needs.

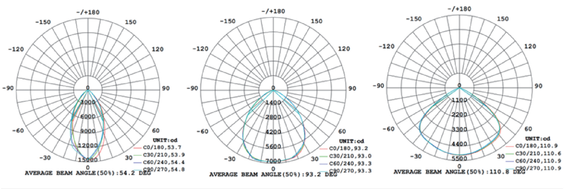

60° 90° 110°

5. There are high-quality SMD2835 or SMD5050 light sources to choose from, high light efficiency and long life; at the same time, non-isolated and isolated drivers are available; different cost-effective, for customers to choose more.

6. Installation diagram:

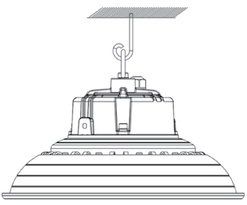

Hook–up installation

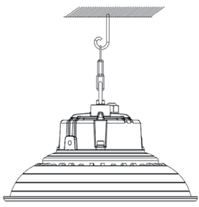

Hanging chain installation

Applications:

Widely used in high-shed factory buildings, workshops, warehouses, exhibition halls, stadiums, waiting rooms, stations, airports, shopping malls, hypermarkets, outdoor buildings and other places.

Parameter:

Model	HB21-100W	HB21-150W	HB21-200W
Power	100W	150W	200W
Lamp Bead Type	SMD2835	SMD2835	SMD2835
Number of lamp beads	210PCS	300PCS	375PCS
Serial-parallel	15S14P	15S20P	15S25P
Light source voltage	45V	45V	45V
Drive type	ZHIHE non-isolated / SOSEN isolated driver, optional		
Driving working voltage	100-277V	100-277V	100-277V
control method	Normal / 0-10V / DALI, optional		
Power factor PF	>0.95	>0.95	>0.95
Light effect Lm / W	>140	>140	>140
Color temperature CCT	3000K~6500K	3000K~6500K	3000K~6500K
Color rendering RA	>80	>80	>80
Beam angle	60°/90°/110°	60°/90°/110°	60°/90°/110°
Body size	φ290x179mm	φ340x185mm	φ360x191mm
Light body material	Die-cast aluminum lamp body + PC lens		
Protection class	IP66/4KV	IP66/4KV	IP66/4KV
Operating temperature	-35℃~+50℃	-35℃~+50℃	-35℃~+50℃
Working humidity	0%~90%	0%~90%	0%~90%
Life / warranty period	> 50000hrs / warranty for 5 years		
Model	**HB21-100W**	**HB21-150W**	**HB21-200W**
Power	100W	150W	200W
Lamp Bead Type	SMD5050	SMD5050	SMD5050
Number of lamp beads	84PCS	96PCS	96PCS
Serial-parallel	2S42P	2S48P	2S48P
Light source voltage	48V	48V	48V
Drive type	SOSEN / MW isolated drive, optional		
Driving working voltage	100-277V	100-277V	100-277V
control method	Normal / 0-10V / DALI, optional		
Power factor PF	>0.95	>0.95	>0.95
Light effect Lm / W	>160	>160	>160
Color temperature CCT	3000K~6500K	3000K~6500K	3000K~6500K
Color rendering RA	>80	>80	>80
Beam angle	60°/90°/110°	60°/90°/110°	60°/90°/110°
Body size	φ290x179mm	φ340x185mm	φ360x191mm
Light body material	Die-cast aluminum lamp body + PC lens		
Protection class	IP66/4KV	IP66/4KV	IP66/4KV
Operating temperature	-35℃~+50℃	-35℃~+50℃	-35℃~+50℃
Working humidity	0%~90%	0%~90%	0%~90%
Life / warranty period	> 50000hrs / warranty for 5 years		

Product size chart:

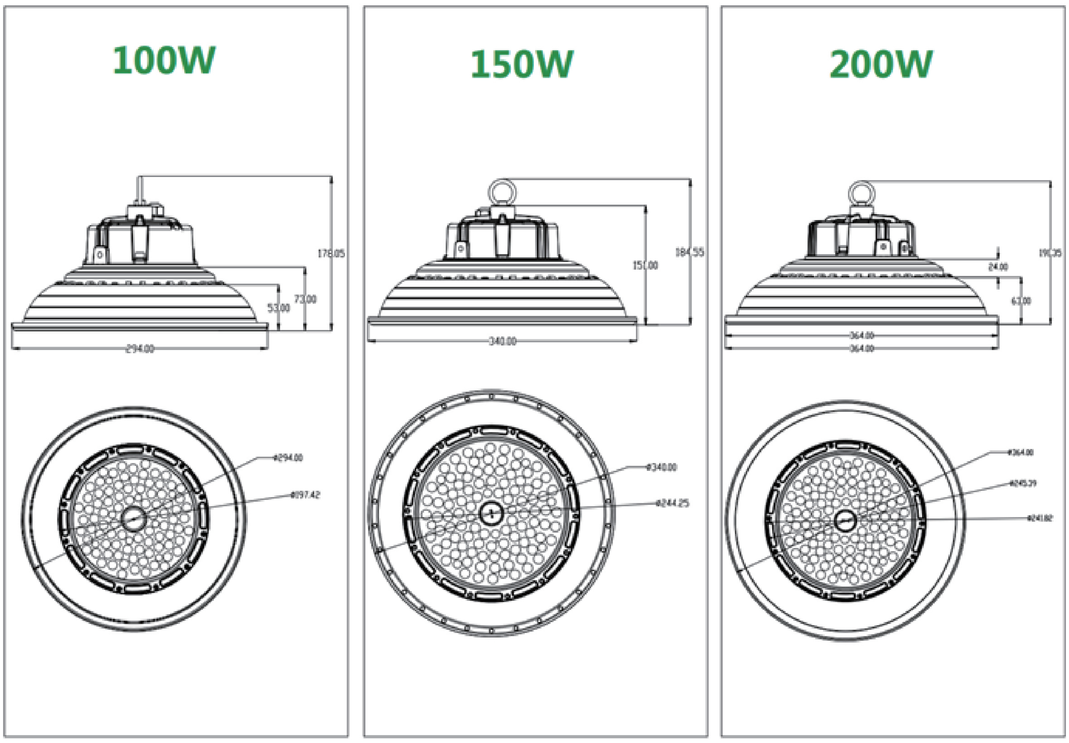

Packaging diagram:

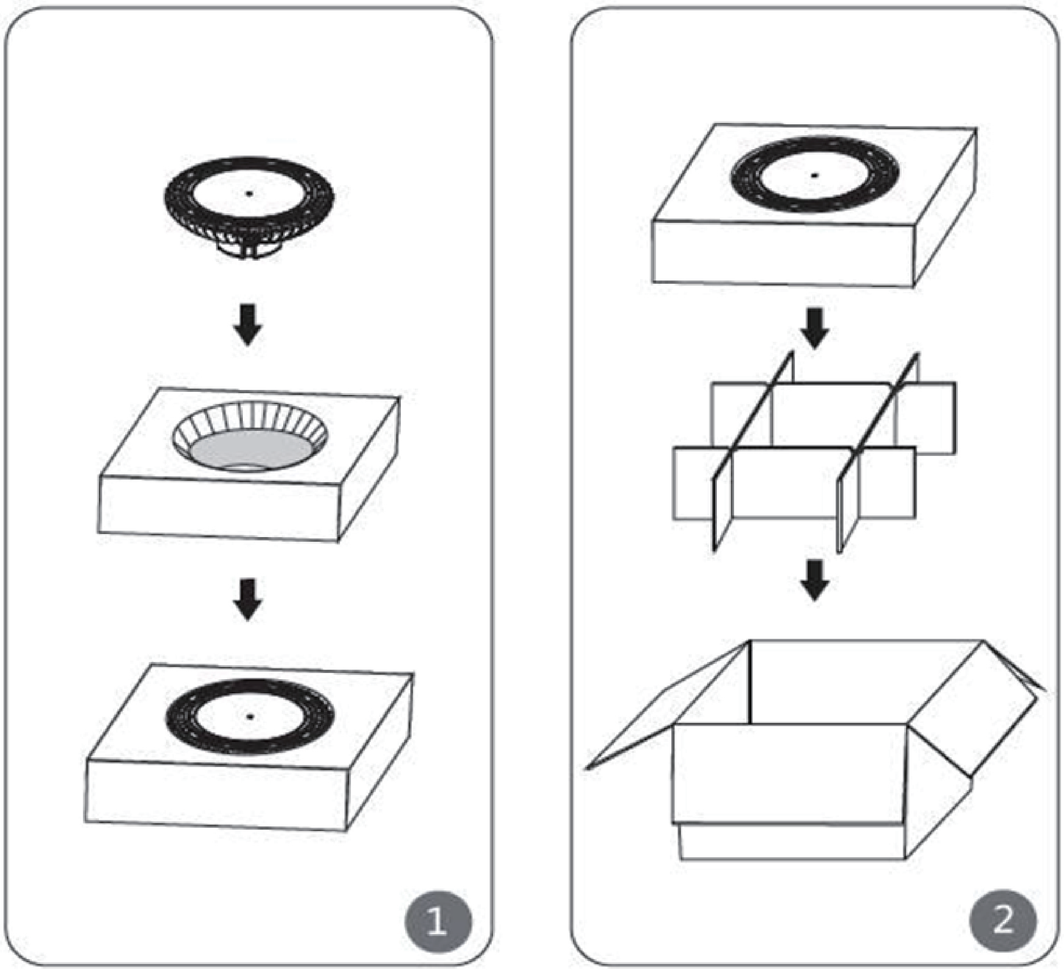

Packaging data:

Model	Product size /mm（ϕ*H）	Package dimensions /mm (L*W*H)	QTY	N.W/G.W
CHZ-HB21-100W	φ290x179	400X400X155	1	1.8/2.2
CHZ-HB21-100W	φ340x185	420X420X165	1	2.8/3.2
CHZ-HB21-100W	φ360x191	445X445X170	1	3.2/3.6