AFW60

COOL flame 620MM INSERT

Tank capacity	3.0L
Maximum operation time	25 hours
Heating function	does not apply
Flame height regulation	7 stages
Flame speed regulation	7 stages
Fuel	filtered tap water / distilled water
Power supply	100-240V, 50 Hz
Output	60 Watts
Finish	Black Electroplate Finish

IN:mm

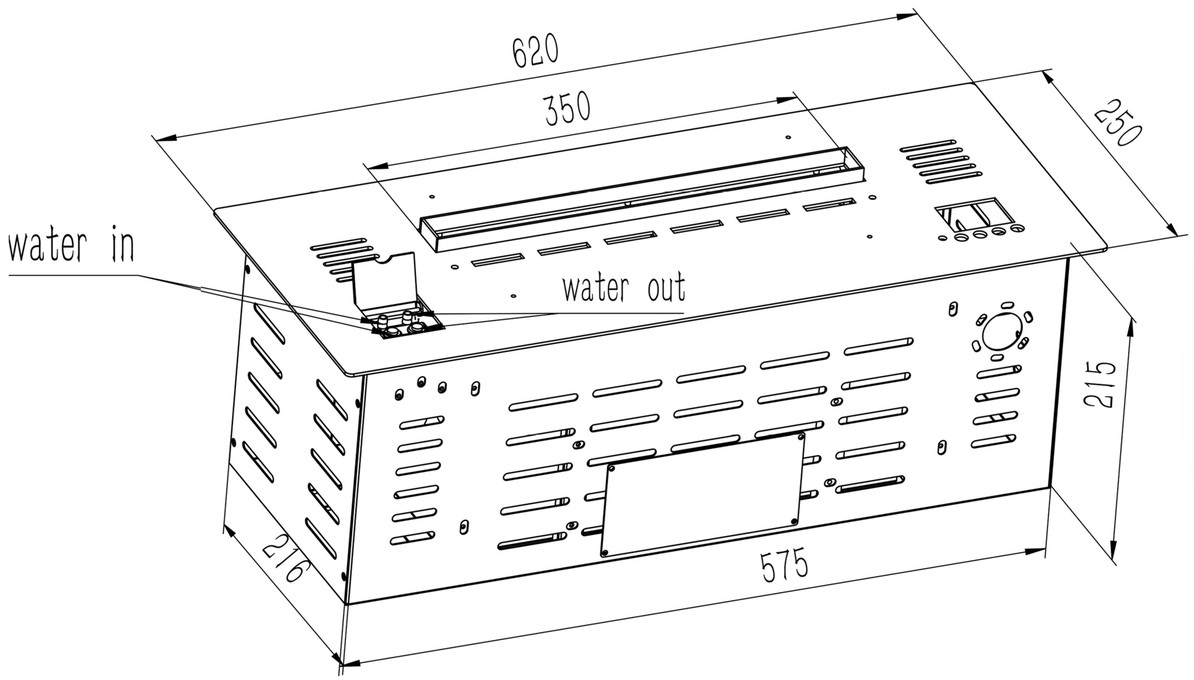

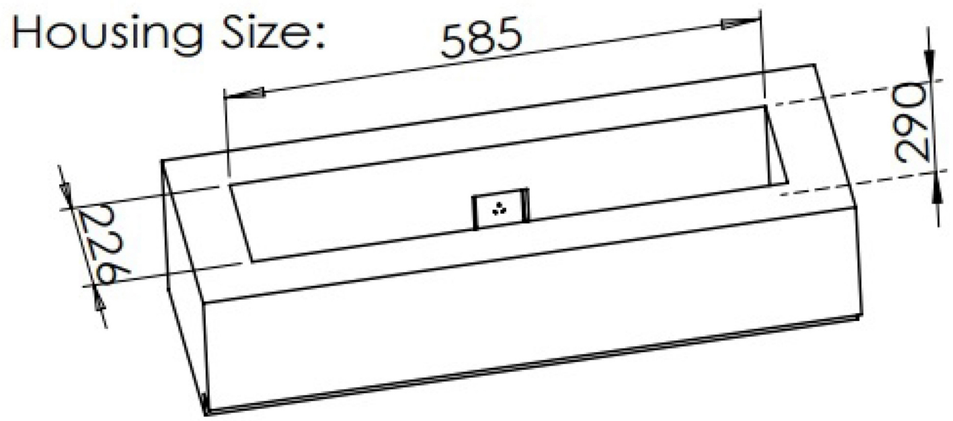

AFW80

COOL flame 820MM INSERT

Tank capacity	3.7L
Maximum operation time	24.7 hours
Heating function	does not apply
Flame height regulation	7 stages
Flame speed regulation	7 stages
Fuel	filtered tap water / distilled water
Power supply	100-240V, 50 Hz
Output	80 Watts
Finish	Black Electroplate Finish

IN:mm

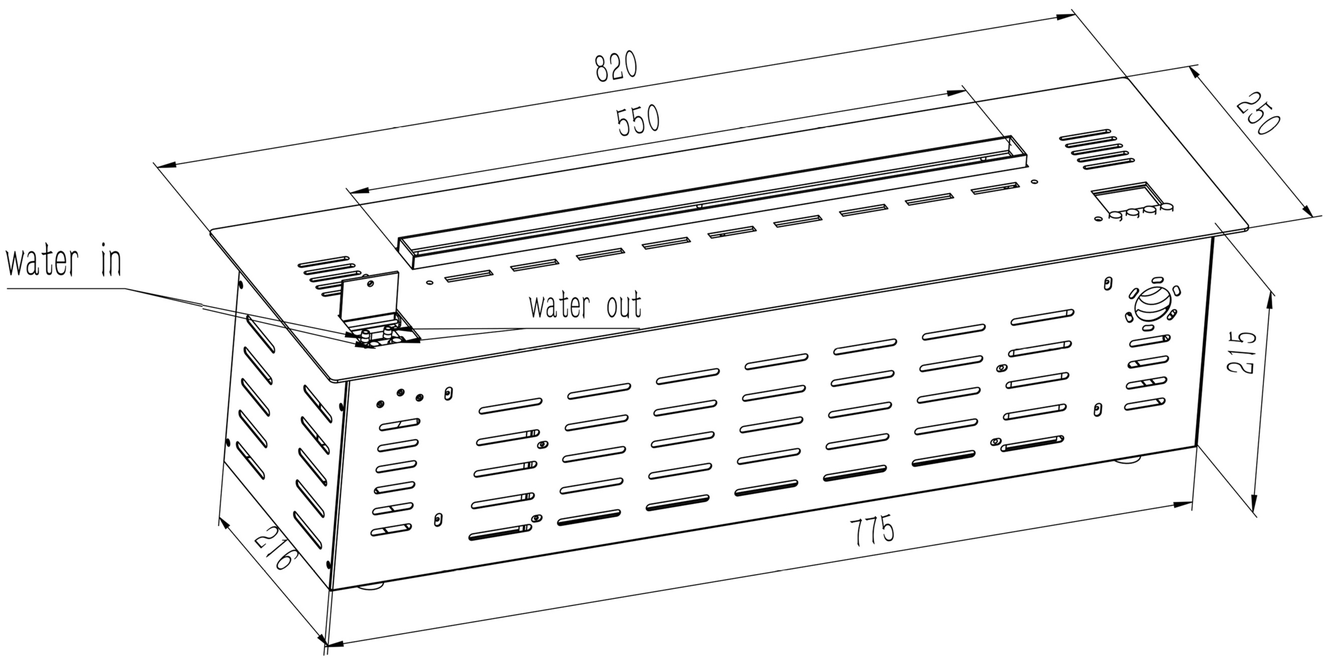

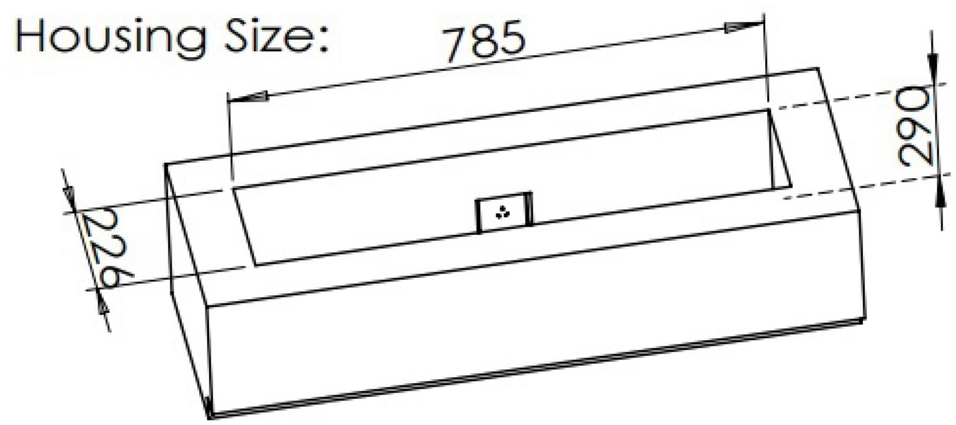

AFW90

COOL flame 920MM INSERT

Tank capacity	4.2L
Maximum operation time	24.7 hours
Heating function	does not apply
Flame height regulation	7 stages
Flame speed regulation	7 stages
Fuel	filtered tap water / distilled water
Power supply	100-240V, 50 Hz
Output	90 Watts
Finish	Black Electroplate Finish

IN:mm

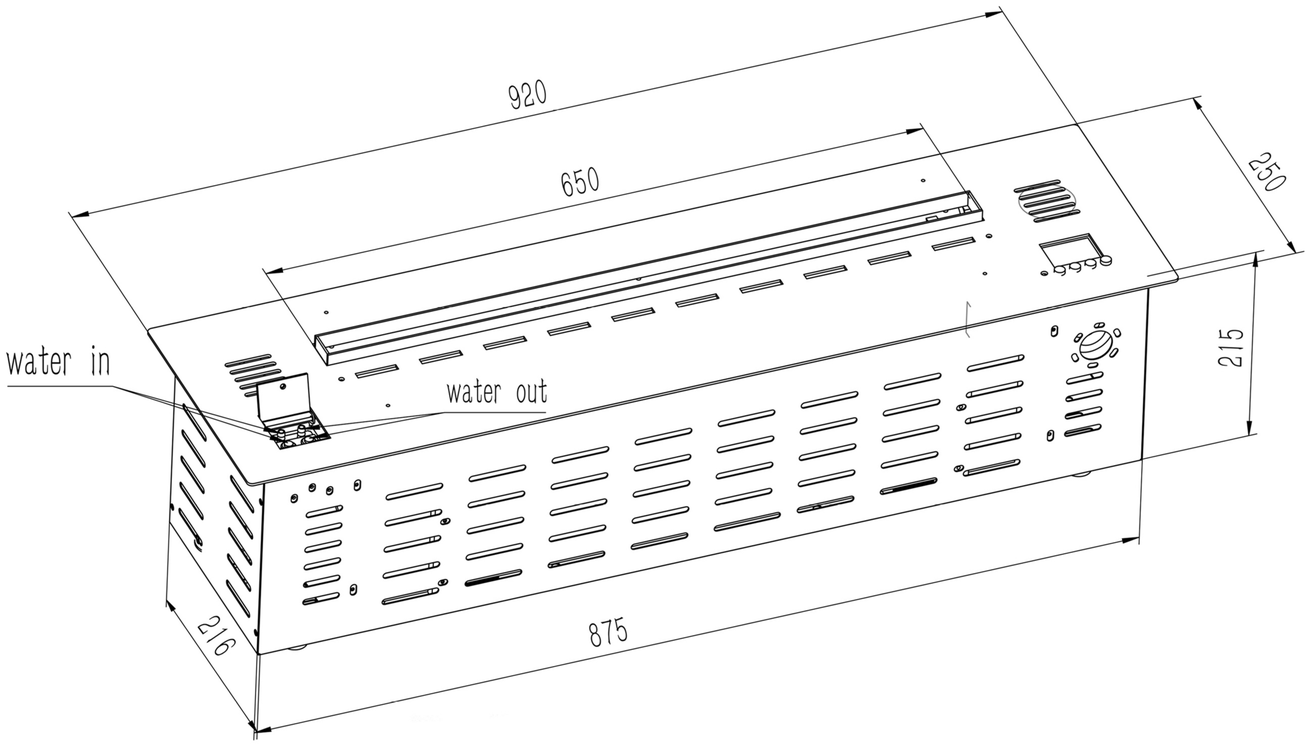

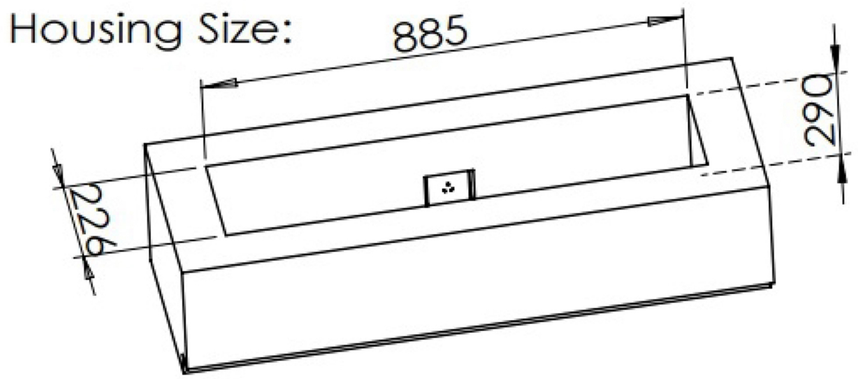

AFW100

COOL flame 1020MM INSERT

Tank capacity	4.7L
Maximum operation time	23.5 hours
Heating function	does not apply
Flame height regulation	7 stages
Flame speed regulation	7 stages
Fuel	filtered tap water / distilled water
Power supply	100-240V, 50 Hz
Output	100 Watts
Finish	Black Electroplate Finish

IN:mm

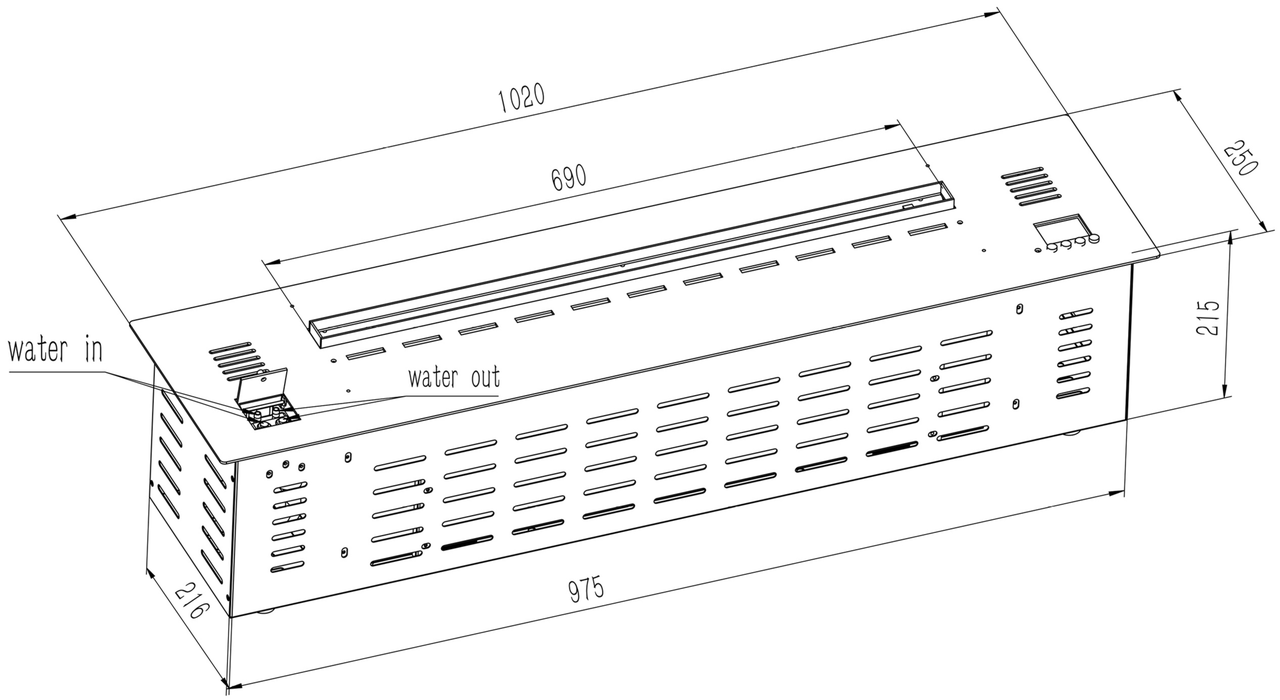

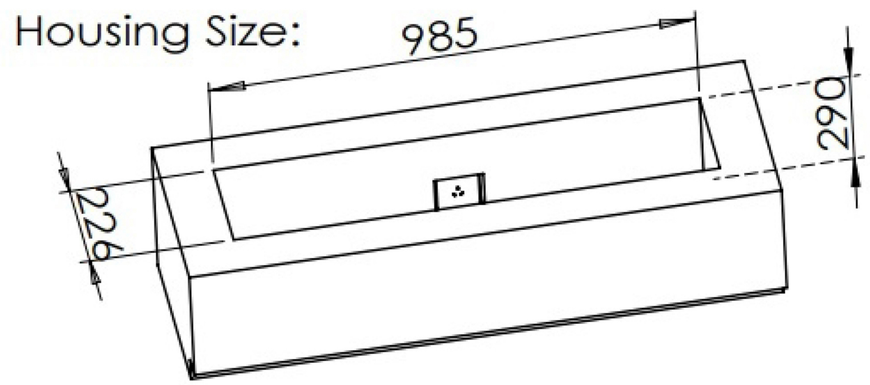

AFW110

COOL flame 1120MM INSERT

Tank capacity	5.2L
Maximum operation time	17.3 hours
Heating function	does not apply
Flame height regulation	7 stages
Flame speed regulation	7 stages
Fuel	filtered tap water / distilled water
Power supply	100-240V, 50 Hz
Output	110 Watts
Finish	Black Electroplate Finish

IN:mm

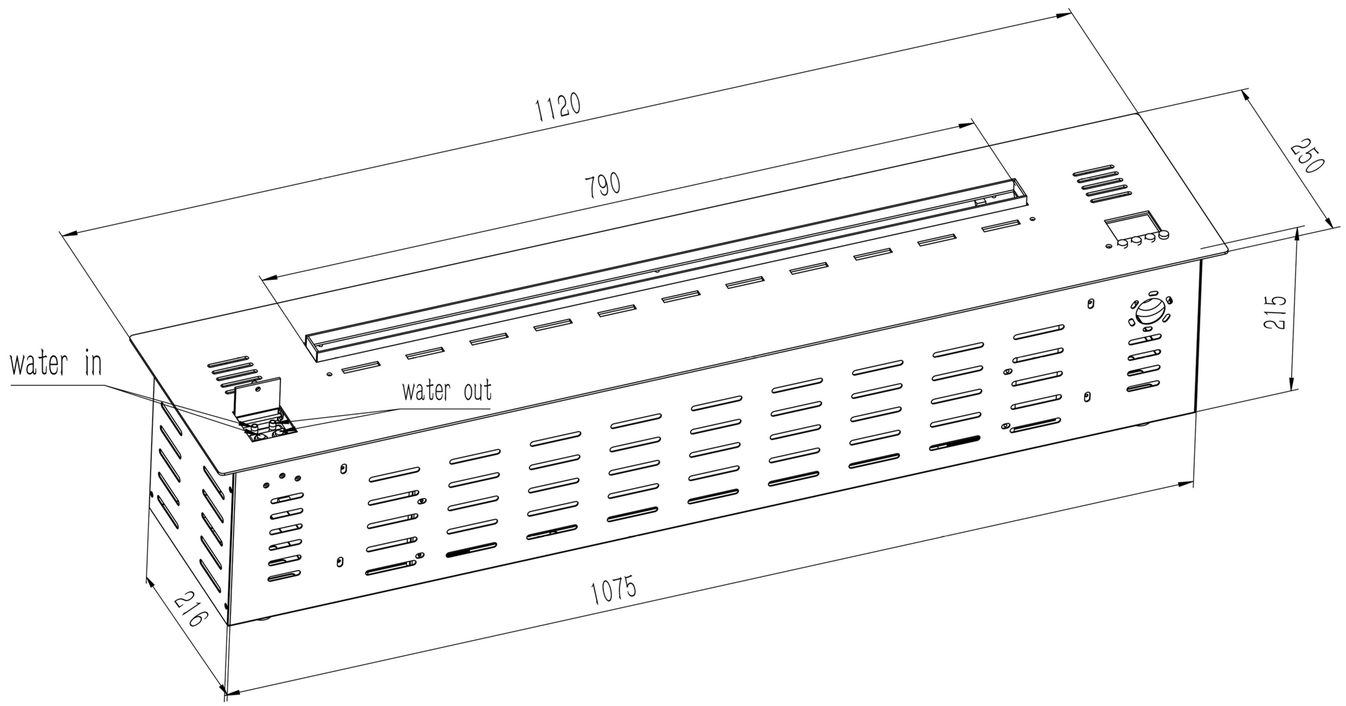

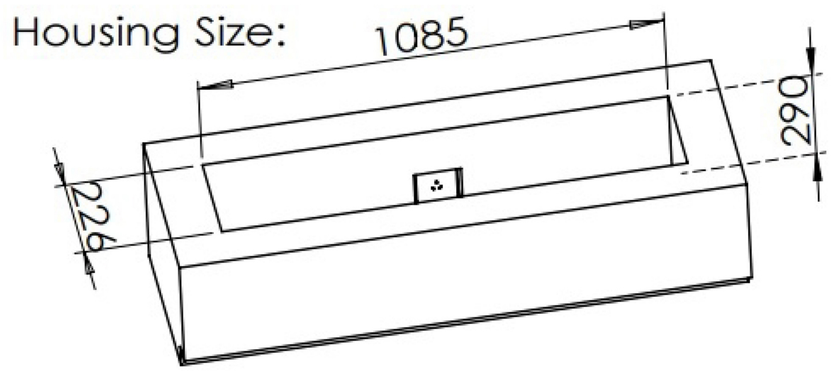

AFW120

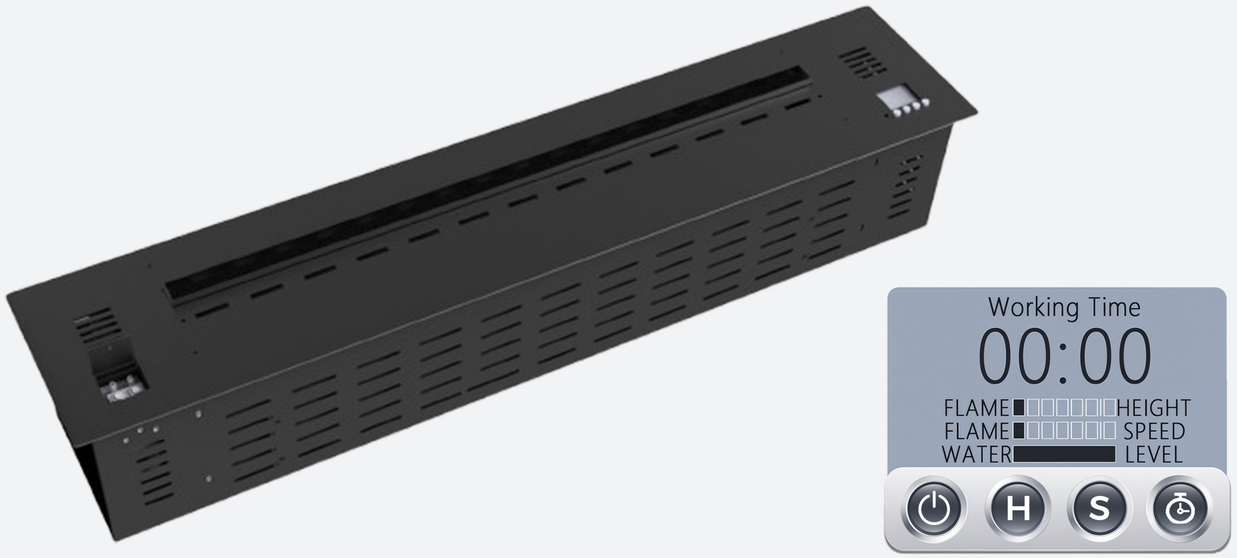

COOL flame 1220MM INSERT

Tank capacity	5.7L
Maximum operation time	19 hours
Heating function	does not apply
Flame height regulation	7 stages
Flame speed regulation	7 stages
Fuel	filtered tap water / distilled water
Power supply	100-240V, 50 Hz
Output	120 Watts
Finish	Black Electroplate Finish

IN:mm

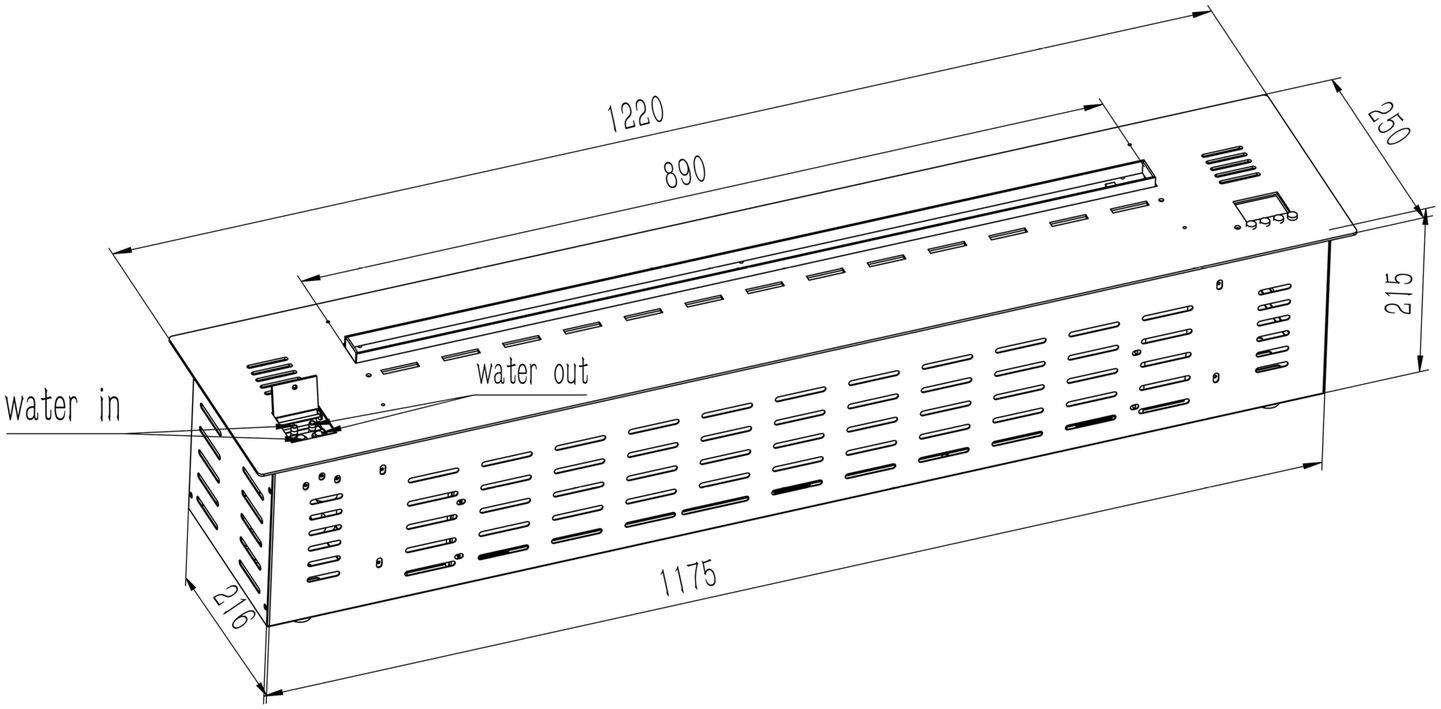

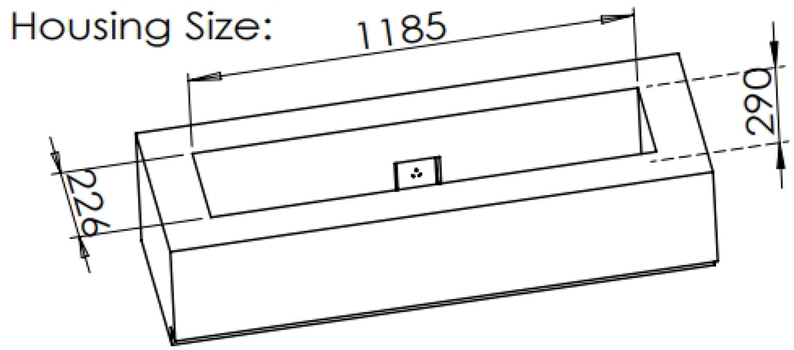

AFW130

COOL flame 1320MM INSERT

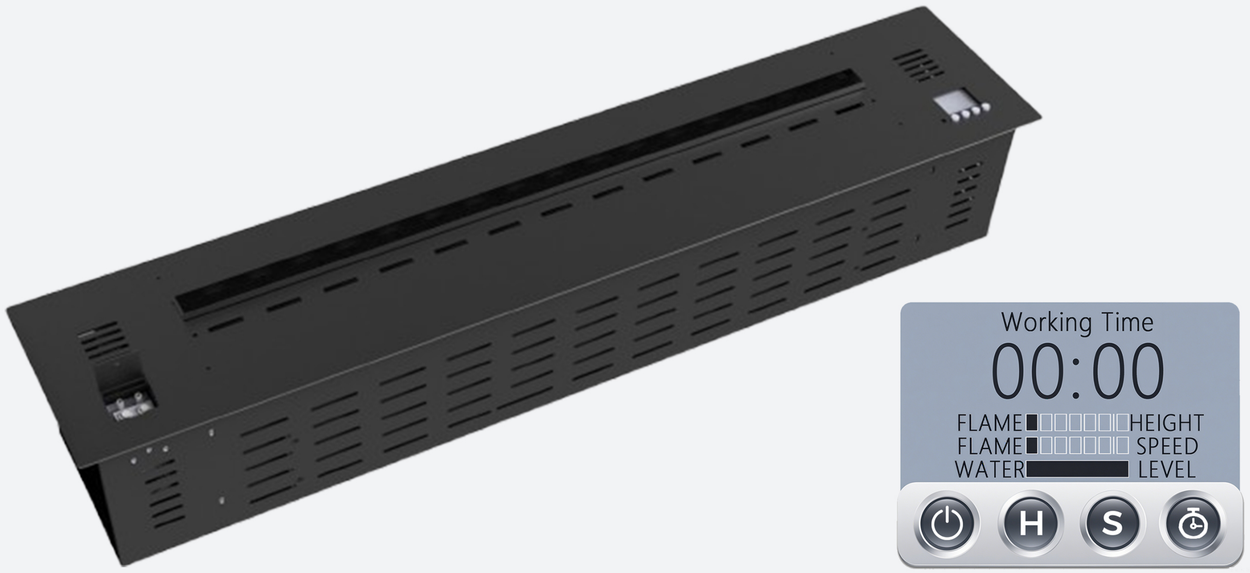

Tank capacity	6.1L
Maximum operation time	15.3 hours
Heating function	does not apply
Flame height regulation	7 stages
Flame speed regulation	7 stages
Fuel	filtered tap water / distilled water
Power supply	100-240V, 50 Hz
Output	130 Watts
Finish	Black Electroplate Finish

IN:mm

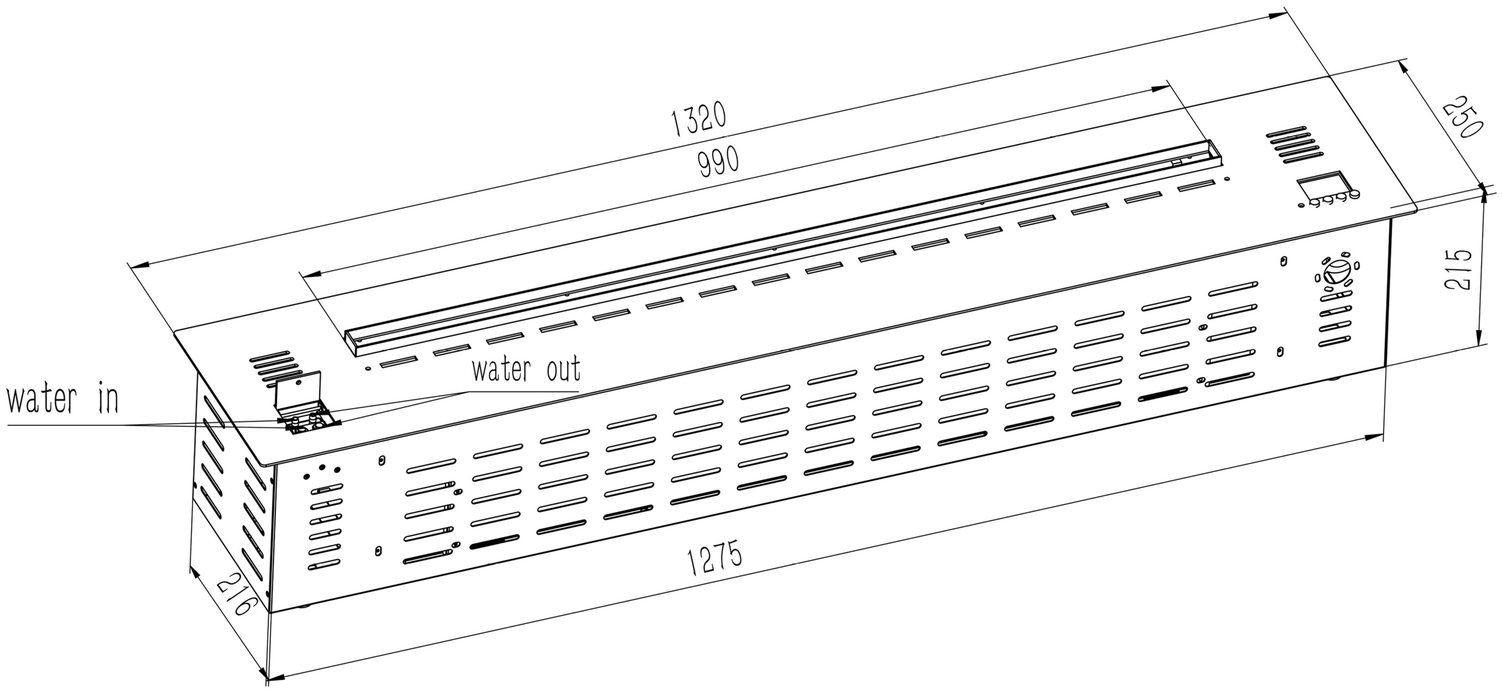

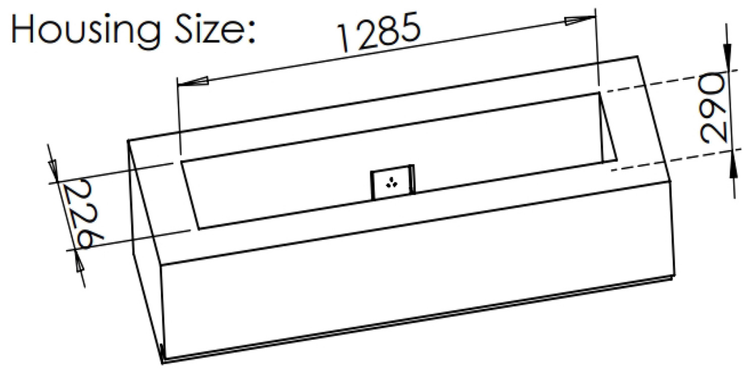

AFW140

COOL flame 1420MM INSERT

Tank capacity	6.4L
Maximum operation time	16 hours
Heating function	does not apply
Flame height regulation	7 stages
Flame speed regulation	7 stages
Fuel	filtered tap water / distilled water
Power supply	100-240V, 50 Hz
Output	140 Watts
Finish	Black Electroplate Finish

IN:mm

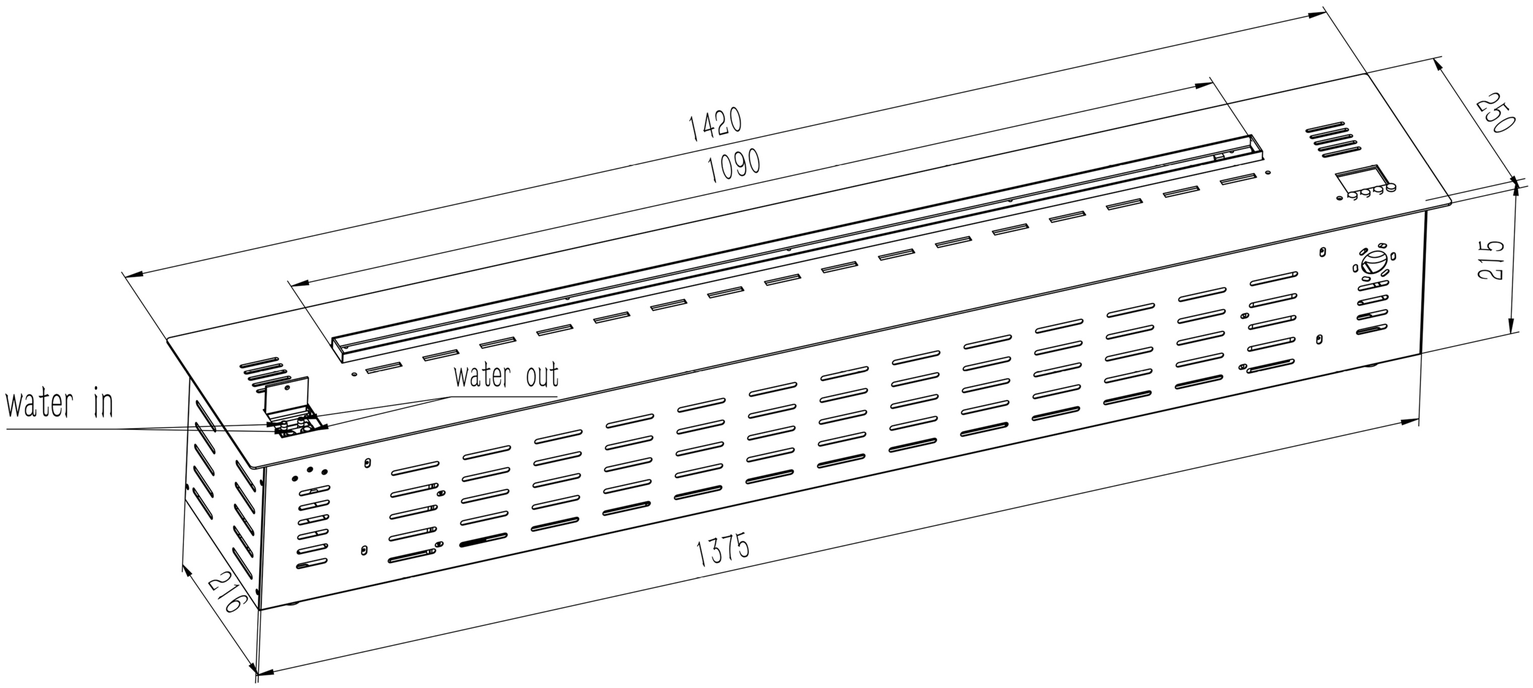

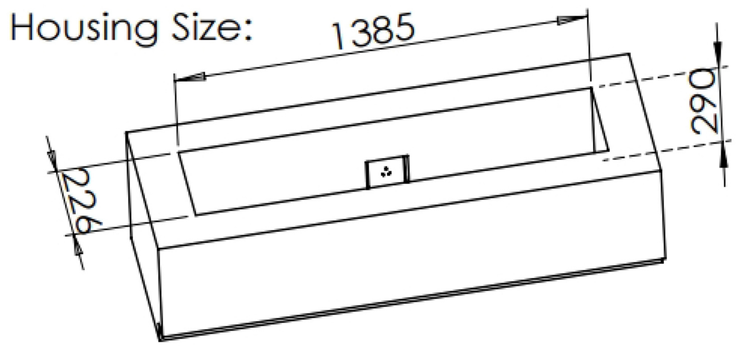

AFW150

COOL flame 1520MM INSERT

Tank capacity	6.7L
Maximum operation time	16.8 hours
Heating function	does not apply
Flame height regulation	7 stages
Flame speed regulation	7 stages
Fuel	filtered tap water / distilled water
Power supply	100-240V, 50 Hz
Output	150 Watts
Finish	Black Electroplate Finish

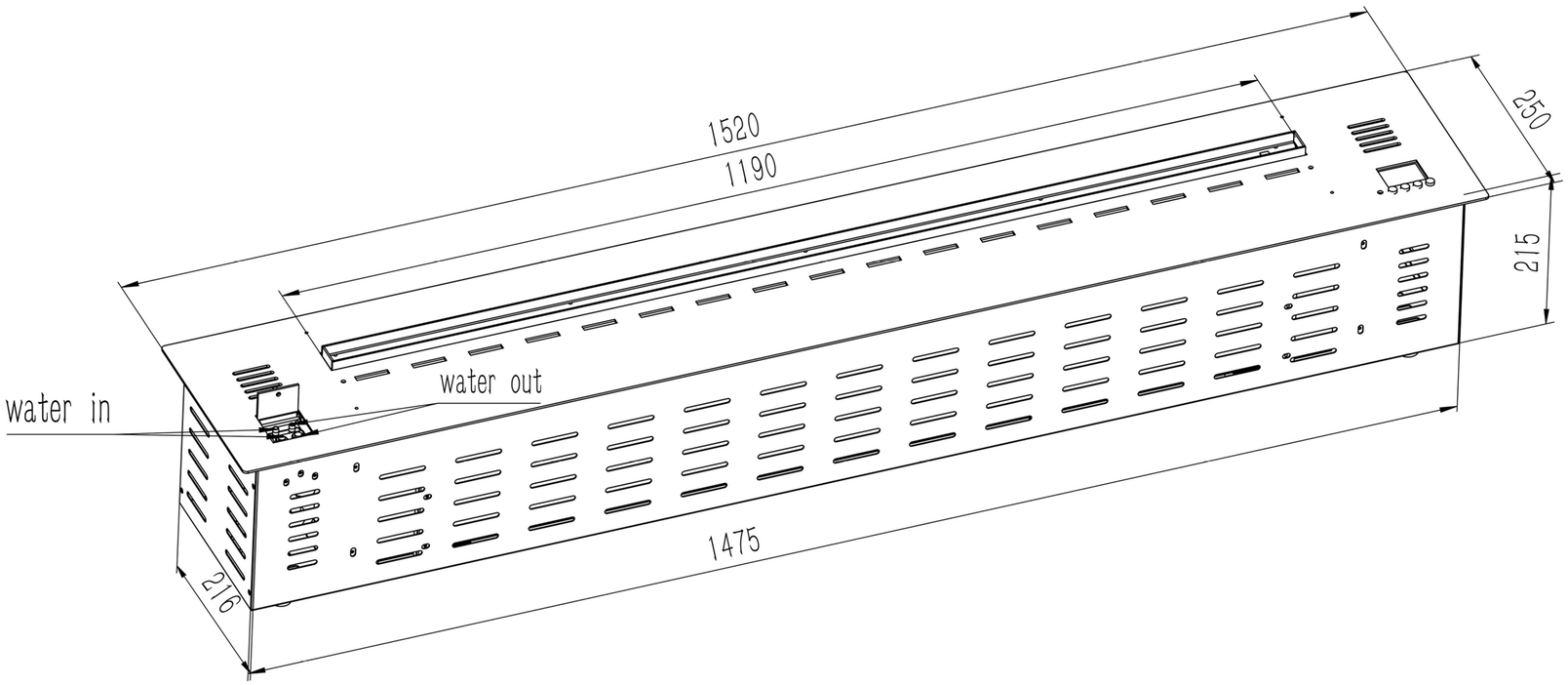

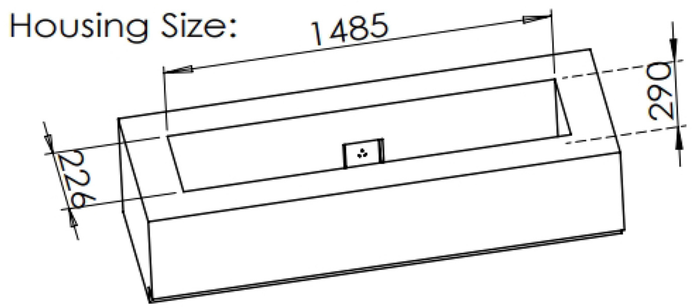

AFW180

COOL flame 1820MM INSERT

Tank capacity	7.8L
Maximum operation time	15.6 hours
Heating function	does not apply
Flame height regulation	7 stages
Flame speed regulation	7 stages
Fuel	filtered tap water / distilled water
Power supply	100-240V, 50 Hz
Output	180 Watts
Finish	Black Electroplate Finish

IN:mm

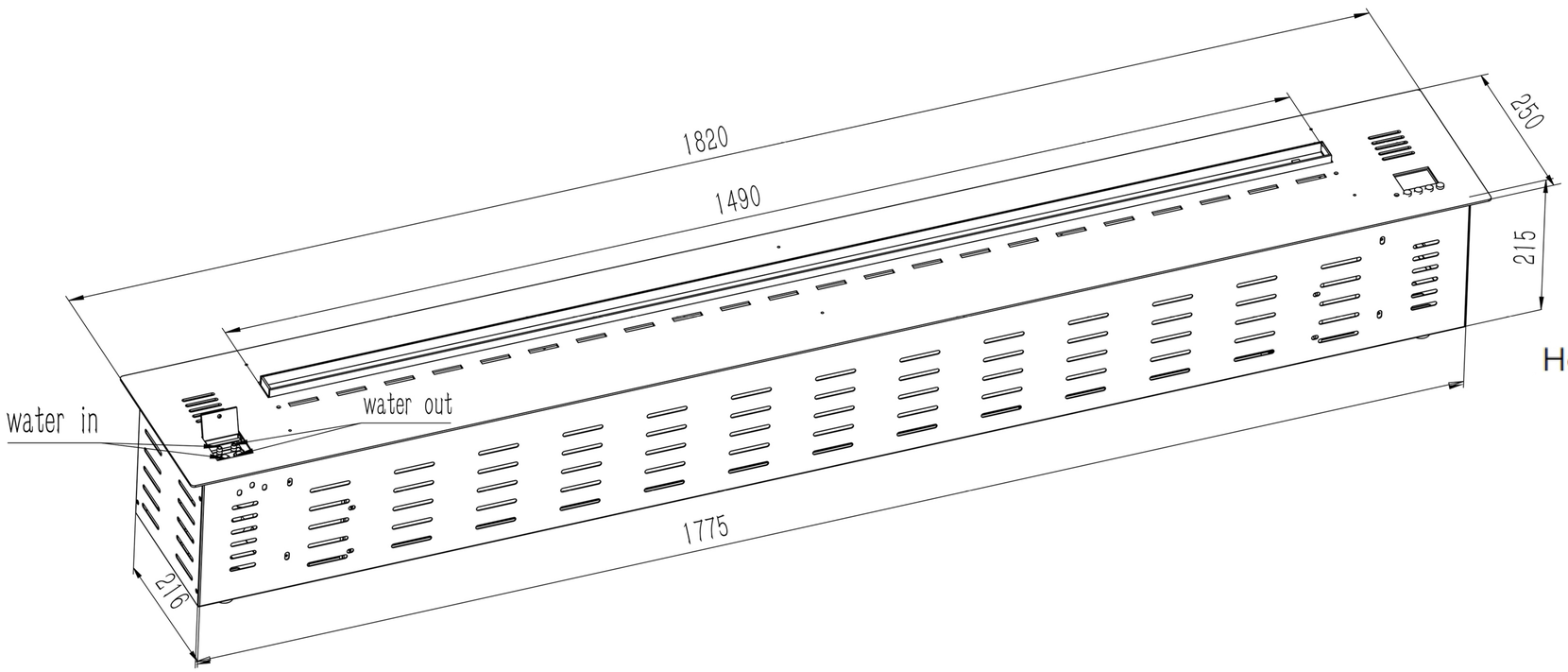

Housing Size:

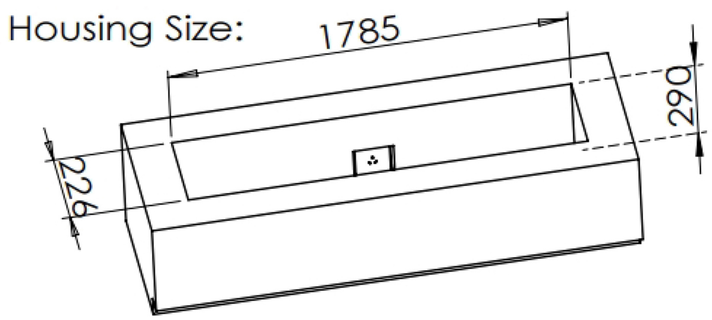

AFW200

COOL flame 2020MM INSERT

Tank capacity	8.7L
Maximum operation time	14.5 hours
Heating function	does not apply
Flame height regulation	7 stages
Flame speed regulation	7 stages
Fuel	filtered tap water / distilled water
Power supply	100-240V, 50 Hz
Output	210 Watts
Finish	Black Electroplate Finish

IN:mm

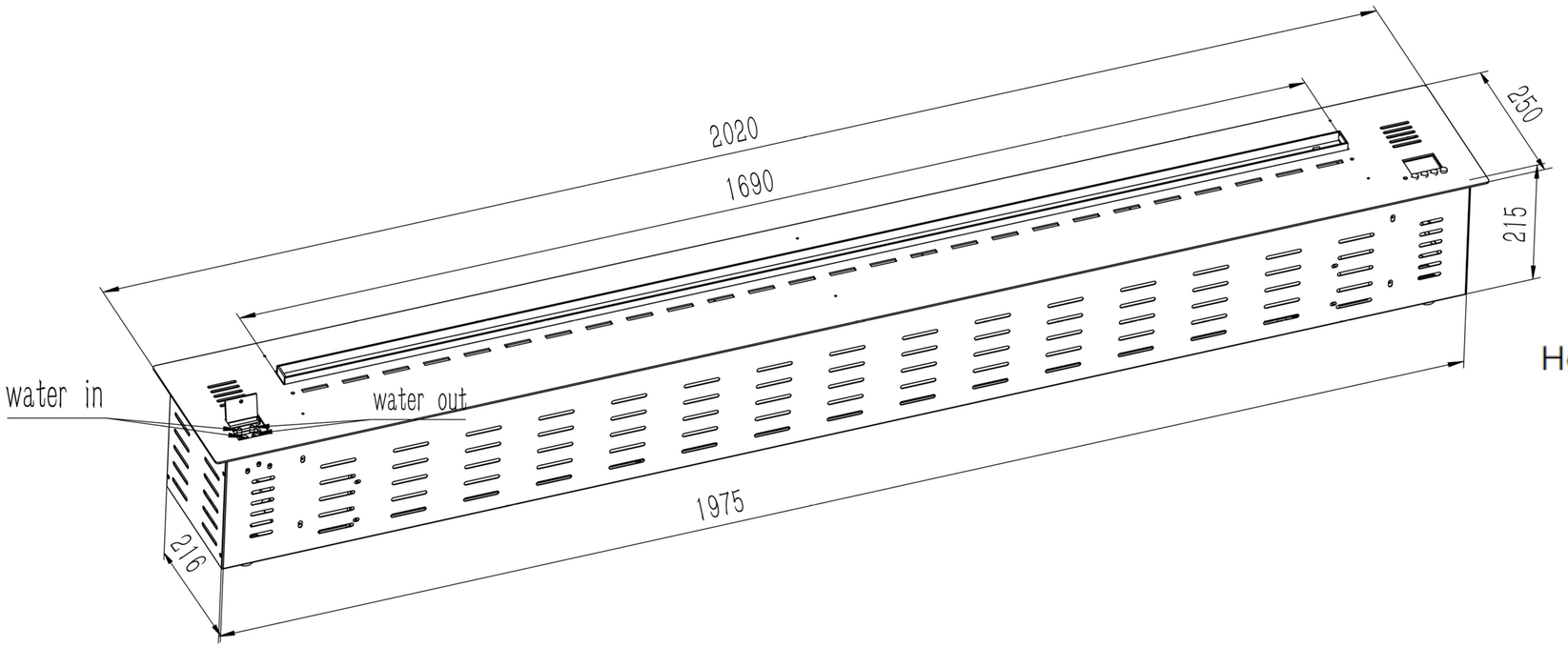

Housing Size:

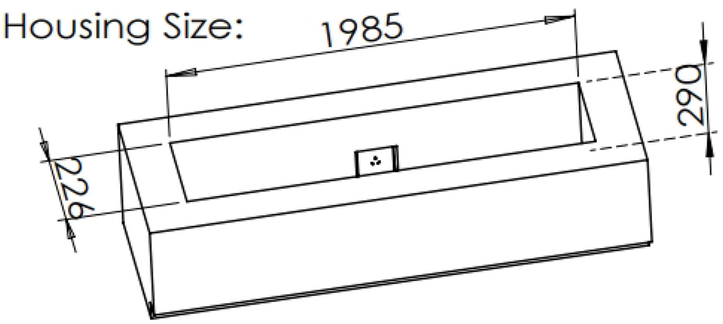

AFW230

COOL flame 1520MM INSERT

Tank capacity	10.7L
Maximum operation time	15.3 hours
Heating function	does not apply
Flame height regulation	7 stages
Flame speed regulation	7 stages
Fuel	filtered tap water / distilled water
Power supply	100-240V, 50 Hz
Output	240 Watts
Finish	Black Electroplate Finish

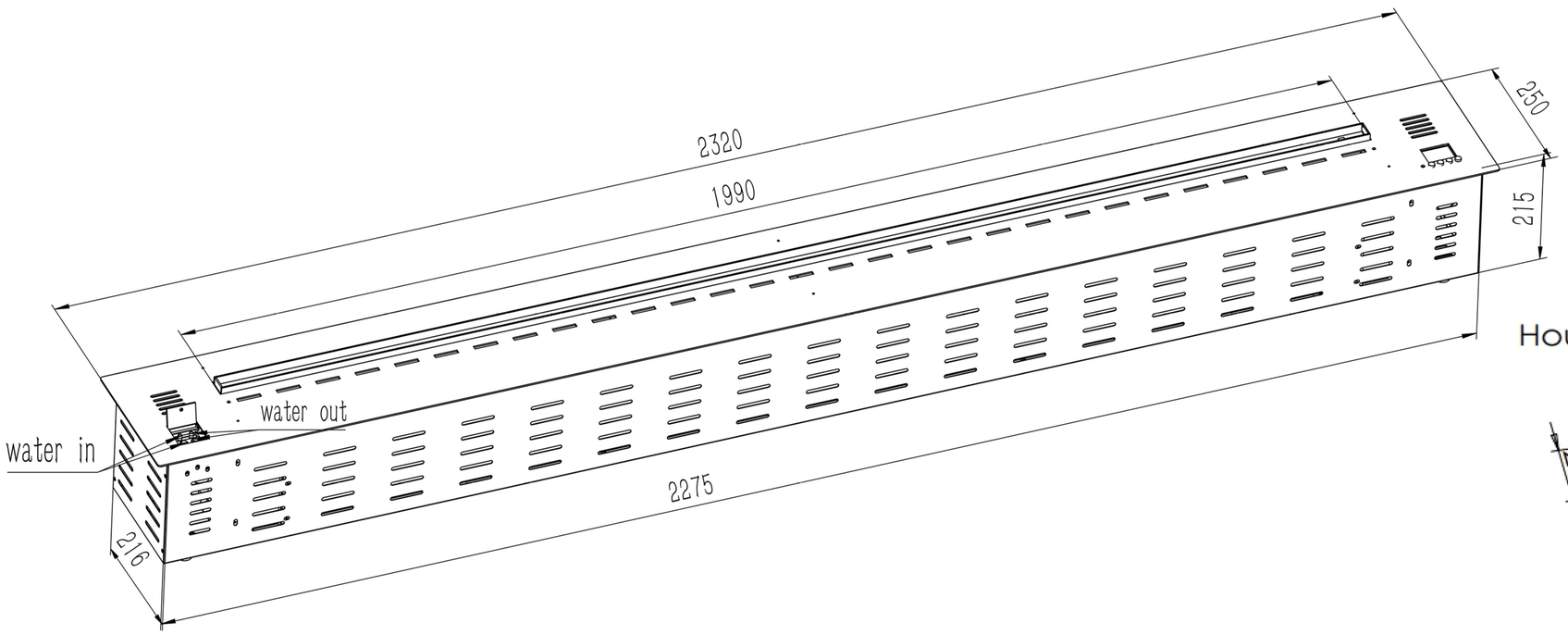

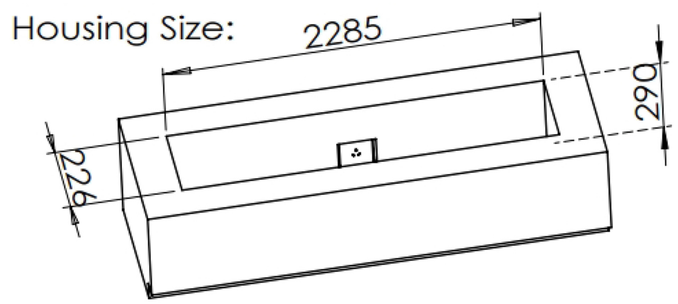

AFW250

COOL flame 2520MM INSERT
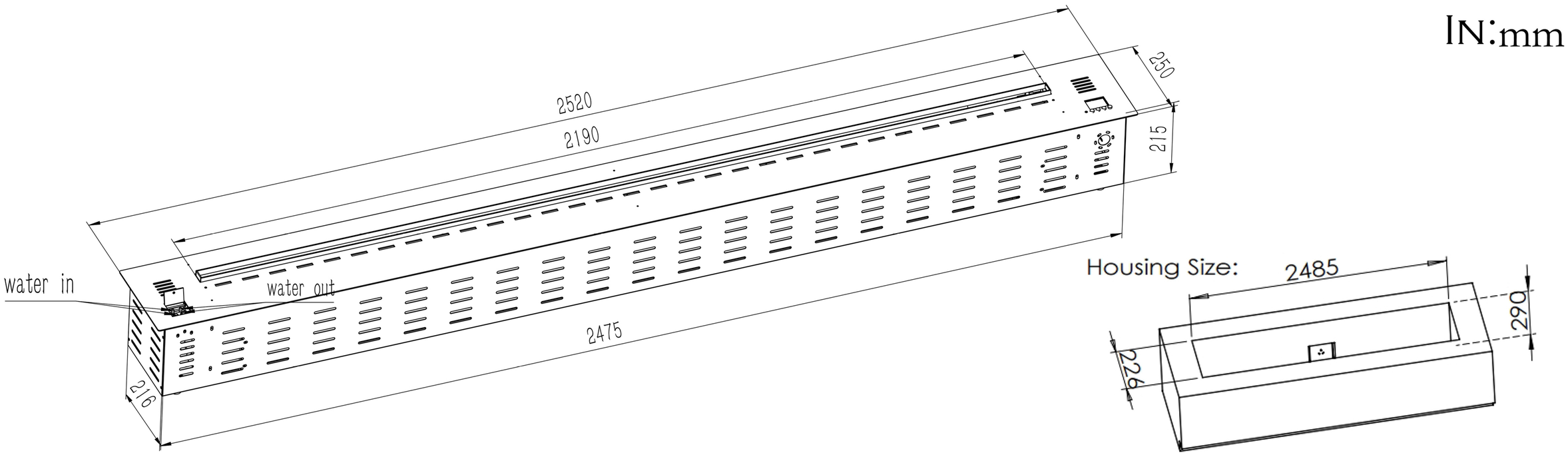
Tank capacity	12L
Maximum operation time	15 hours
Heating function	does not apply
Flame height regulation	7 stages
Flame speed regulation	7 stages
Fuel	filtered tap water / distilled water
Power supply	100-240V, 50 Hz
Output	280 Watts
Finish	Black Electroplate Finish