

HR3-PR series servo user manual (CN23.10)

Catalogue

Chapter 1 Selection and Installation..... 1
1.1 demonstration of the type 1
1.2 Specifications and parameters..... 2
1.2.1 Basic parameters of the model..... 2
1.2.2 Electrical parameters of each model..... 3
1.3 interface specification 3
1.4 Drive installation..... 6
1.4.1 installation site 6
1.4.2 ambient condition 6
1.4.3 installation size 7
1.4.4 Installation precautions..... 8
1.4.5 landing 9
1.4.6 Cabling requirements..... 9
Chapter 2 Connection..... 10
2.1 System wiring description..... 10
2.2 Control signal port definition..... 12
2.3 Power terminal definition and wiring description..... 13
2.3.1 Definition of power supply and motor terminals..... 13
2.3.2 Clasp terminal wiring method..... 13
2.3.3 Example of main circuit wiring..... 14
2.3.4 Main return cable specifications..... 15
2.4 Resistor wiring instructions..... 16
2.4.1 Resistor wiring..... 16
2.4.2 Resistor specification..... 16
2.4.3 Resistor selection calculation..... 17
2.5 Crankshaft wiring instructions..... 18
2.6 Control signal CN1 port definition and wiring description..... 19
2.6.1 Control signal CN1 port definition..... 19
2.6.2 Instructions for digital input wiring..... 21
2.6.3 Description of digital output wiring..... 24
2.6.4 Description of frequency division output wiring..... 27
2.6.5 Location instruction wiring description..... 28
2.6.6 Description of analog input wiring..... 35
2.7 Encoder terminal definition and wiring instructions..... 36
2.7.1 Motor encoder..... 36
2.8 Definition of communication terminals..... 37

2.8.1 Debug the terminal in the background…… 37
2.9 Grounding and anti-interference measures…… 37
2.9.1 Grounding measures……37
2.9.2 Countermeasures…… 38
2.9.3 noise filter …… 39
2.9.4 earth leakage circuit breaker …… 42
2.9.5 Cable and wiring requirements……42
2.9.6 Input and output magnetic ring selection…… 45
2.9.7 Solutions to common EMC problems…… 46
2.10 Three control mode wiring……47
Chapter 3 Test Operation…… 50
3.1 Basic operation Settings…… 50
3.1.1 Motor adjustment…… 50
3.1.2 Brake setting…… 53
3.1.3 Operation direction selection…… 58
3.1.4 Absolute value function…… 58
3.1.5 Electronic gear ratio setting…… 61
3.1.6 sequence chart …… 65
3.1.7 move ……72
3.1.8 halt …… 73
3.2 Panel controls operation…… 74
3.2.1 Panel Introduction……74
3.2.2 The panel is operated by clicking…… 79
3.3 DriveStart usage……80
3.3.1 summary …… 80
3.3.2 Java runtime environment Java …… 80
3.3.3 Parameter management……81
3.3.4 oscilloscope …… 83
3.3.5 initialise …… 86
3.3.6 pilot run …… 8
3.3.7 harmonious …… 93
3.3.8 troubleshooting …… 97
Chapter 4 Basic Functions…… 100
4.1 Function overview…… 100
4.2 control model …… 102
4.2.1 Location control mode……102
4.2.2 Speed control mode……147
4.2.3 Torque control mode…… 166

4.3 application function ……187
4.3.1 Soft limit……187
4.3.2 Split output…… 188
Chapter 5 Profit Adjustment…… 191
5.1 purpose ……191
5.2 Calibration method…… 192
5.2.1 Mechanical load identification…… 193
5.2.2 Manual gain adjustment…… 196
5.2.3 Gain switching…… 207
5.2.4 automatic gain control …… 213
5.3 vibration abatement ……216
5.3.1 notch filter …… 216
5.3.2 vibration abatement ……217
5.4 Common application scenarios…… 21
5.4.1 Rolling screw load…… 21
5.4.2 Sync tape load……222
5.4.3 Gear rack load……223
5.4.4 Inertial disc load…… 224
5.4.5 Long cantilever load…… 225
Chapter 6 Fault and Warning Handling…… 27
6.1 Display and view……227
6.2 List of fault codes……228
6.3 List of warning codes…… 230
6.4 fault treatment …… 231
6.5 Warning processing…… 239
6.6 Redeployment method…… 241
Chapter 7 Parameter Description…… 242
7.1 Function code allocation 1…… 242
7.2 DIDO, function definition…… 274

Chapter 1 Selection and Installation

1.1 Demonstration of the Type

HR3-PR5R5S

characteristic	Product serial number HR3 series servo
HR3	

characteristic	Instruction type
P	pulse/analogue

characteristic	Drive type general servo motor
R	

characteristic	rated voltage
S2	Single phase 220VAC

	001	1R6	2R8	5R5	7R6	012*	014*
rated current	1.0A	1.6A	2.8A	5.5A	7.6A	11.6A	14.0A
power rating	100W	200W	400W	750W	1000W	1500W	2000W

Note: 012 and 014 models support single-phase/triple-phase 220V, which will be launched soon.

1.2 Specifications Parameters

1.2.1 Basic Parameters of the Model

Table 1-1 Basic Parameters of the Model

project			description
Basic specifications	control method		IGBT SVPWM control, sinusoidal current drive mode. 220V: single phase or three phase full wave rectification.
	service condition	Use/Storage Temperature 1	0~+40℃/-20~+70℃
		Use/Storage humidity	Below 90%RH (non-condensation)
		Vibration/shock resistance	4.9m/s²/19.6m/s²
		levels of protection	IP20
		class of pollution	PD2 level
		above sea level	The highest altitude is 5000m, no reduction is required for 1000m and below, 1% reduction for every 100m above 1000m. Contact the manufacturer if the altitude exceeds 2000m.
Location control mode	function	feedforward compensation	Support speed feed forward (0~100.0%) setting, eliminate follower deviation
		Instructional restructuring	Position instruction low pass filter, mean filter
	Frequency division output	Output format	A phase, B phase, Z phase: differential output
		Bandwidth range	One rotation of the motor can be divided into any pulse in the range of 140 to 1048576.
Speed rotation control mode	function	Dynamic characteristics of current loop	Step response: 187.5us (0~100%); Frequency response: -3dB amplitude attenuation bandwidth, 2000Hz (command signal: ±25%); -90° phase shift bandwidth, 3500Hz (command Signal: ±25%)
		speed control range	0~12000rpm, there is a demand for speed over 6000rpm, please contact the manufacturer.
		Dynamic characteristics of velocity ring	Step response: 562.5us (0~1000rpm); Frequency response: -3dB amplitude attenuation bandwidth, 1000Hz (command signal: ±500rpm); -90° phase shift bandwidth, 630Hz (Command signal: ±500rpm)
		Torque control accuracy	±2%
IO	Digital input signal		Function can be configured: forward overtravel switch, reverse overtravel switch, origin switch, etc
	Digital output signal		Function can be configured: servo ready, zero speed signal, speed arrival, position arrival, positioning approach signal, torque limit, warning, servo fault, etc.
Supporting functions	Electronic gear ratio		Built-in two sets of electronic gear ratio, support gear ratio switching function
	Limitation protection		Stop immediately when the forward and reverse overtravel switches are in action.
	fault detect		Overcurrent, overpressure, undervoltage, overload, abnormal detection of the main circuit, overheating of the radiator, excessive speed, abnormal encoder, abnormal parameters, etc.
	Display functions		5 LED display, power indicator CHARGE
	vibration abatement		It has 4 notch filters, 50Hz~5000Hz, and all 4 notch filters can be set adaptively.
	Ease of use		Self-integration, velocity observer, model tracking
	debugging interface		USB
	other		Status display, alarm record, JOG operation, etc.
! pay attention to			
Note 1: Please install or store the servo driver within this temperature range.			

1.2.2 Electrical Parameters of Each Model

Table 1-2 Electrical Specifications of Servo Driver

structure size	SIZE-A-type			S I Z E-B type		SIZE-C-type 1	
Model HR3-PR	001S2	1R6S2	2R8S2	5R5S2	7R6S2	012S2	014S2
Rated output current Arms	1.0	1.6	2.8	5.5	7.6	11.6	14.0
Maximum output current Arms	3.9	5.8	10.1	16.9	23.0	32.0	42.0
Rated input current Arms	1.3	2.3	4.0	7.9	9.6	Single phase 12.8/ three phase 8.0	Single phase 16.0/ three phase 10.2
Main circuit power supply	Single-phase AC 200V~240V, -10~+10%,50/60Hz					Single phase/three phase AC 200 V~240V, -10 ~ +10%,50/60Hz	
Regenerative functions [2]	No standard regenerative resistor			Optional 50 Ω/50W regenerative resistor		Optional 2502/80W regenerative resistor	

Note 1: The SIZE-C model will be released soon.

Note 2: All models support external regenerative resistors.

1.3 interface specification

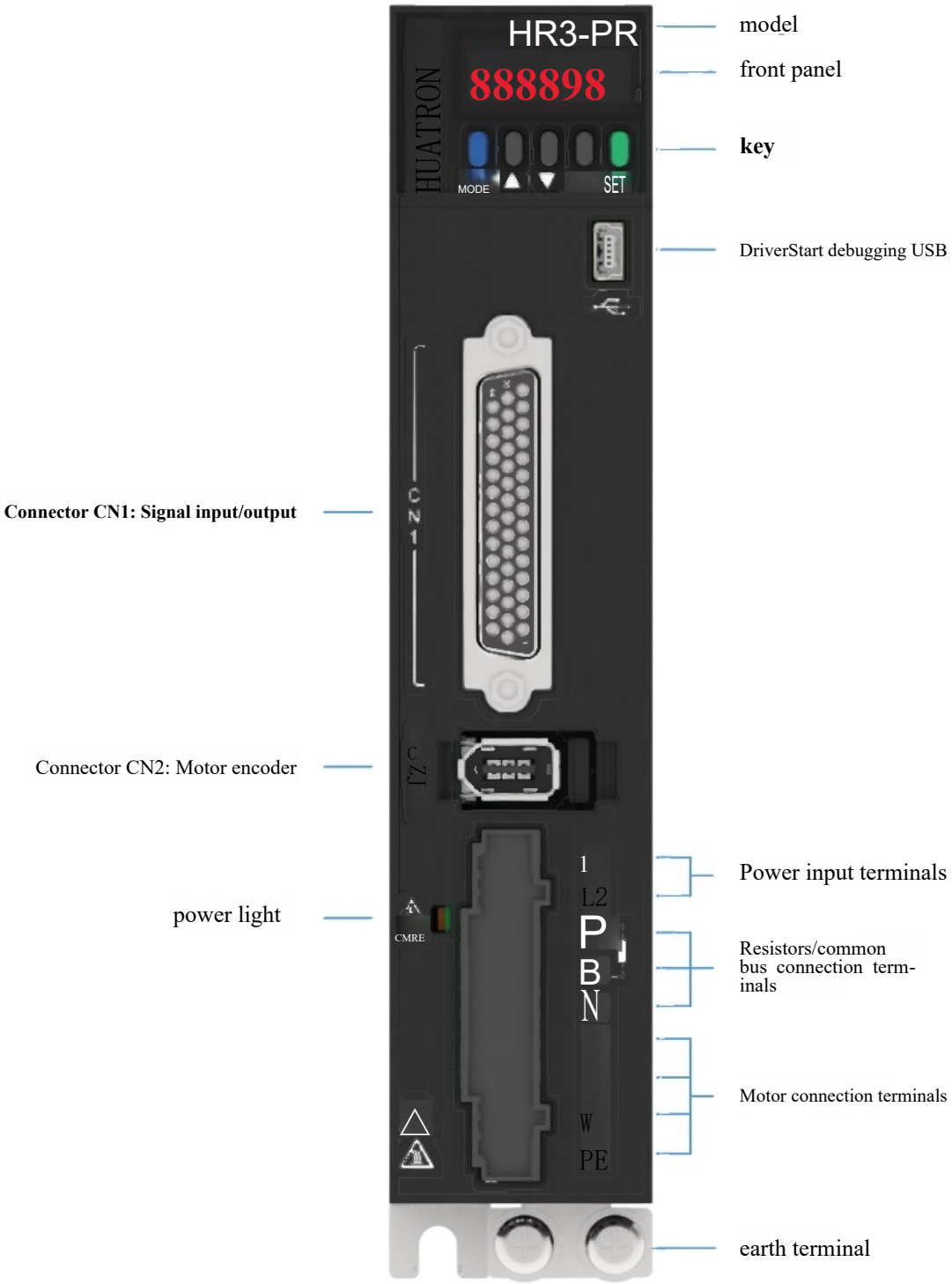

Figure 1-1 SIZE-A Model Interface Naming

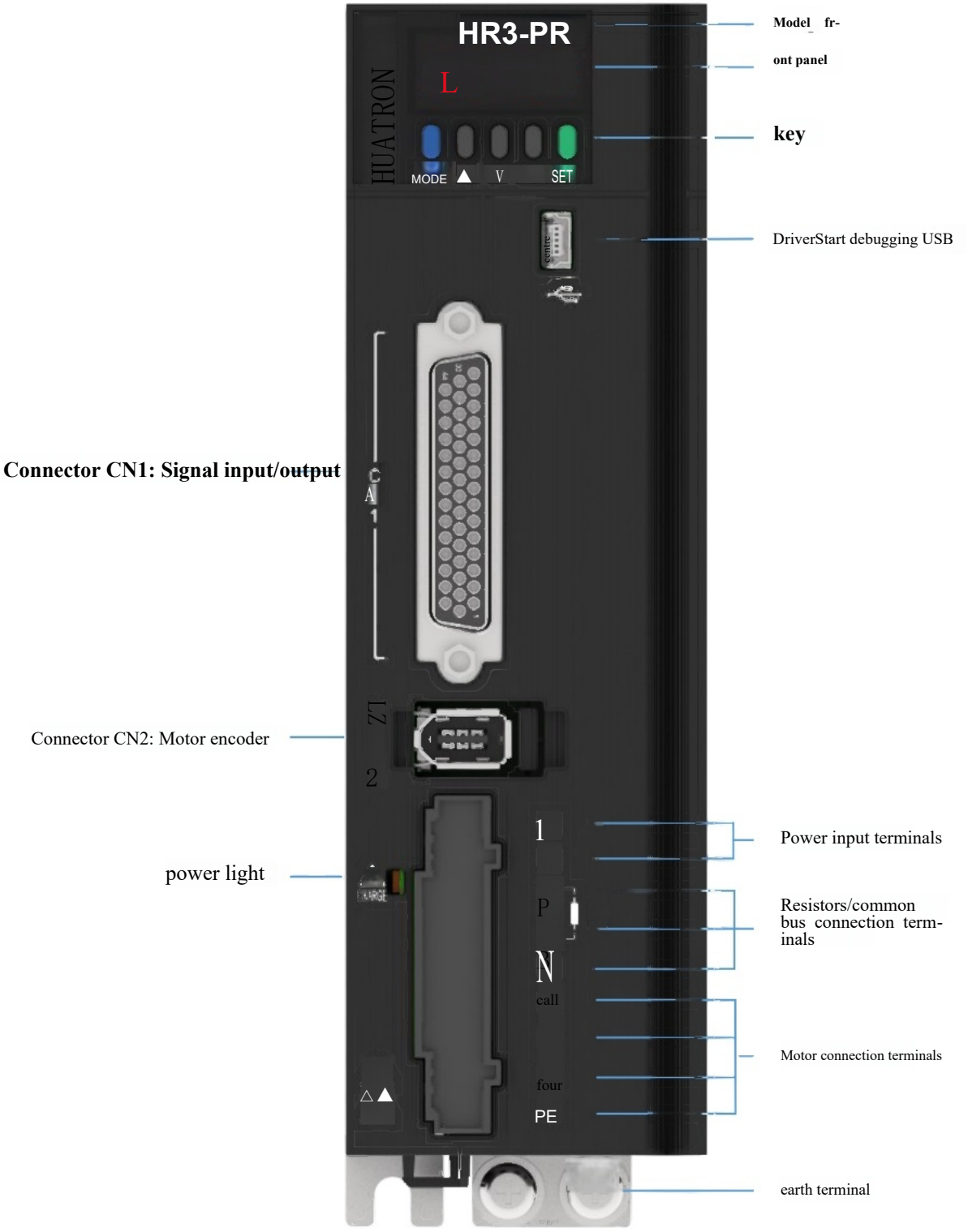

Figure 1-2 SIZE-B Model Interface Naming

1.4 Drive Installation

1.4.1 Installation Site

Table 1-3 Drive Installation Sites

Please install in a sun and rain free electrical control cabinet
Do not use this product in corrosive environment such as hydrogen sulfide, chlorine, ammonia, sulfur, chlorinated gas, acid, alkali, salt, etc
Do not use this product near flammable gas environment or combustible
Do not install in high temperature, humidity, dust, metal dust environment
A vibration-free site
Installation site contamination level: PD2

1.4.2 Ambient Condition

Table 1-4 Driver Installation Environmental Conditions

project	description
Use ambient temperature	0～+40℃
Use environment humidity	Below 90%RH (non-condensation)
storage temperature	-20~70℃ (non-freezing)
Storage humidity	Below 90%RH (non-condensation)
vibrate	4. Below 9 m/s²
lash	19. Below 6 m/s²
levels of protection	IP20 Note: Except for the terminal (IPO0)
height	The highest altitude is 5000m, and no reduction is required for 1000m and below. For more than 1000m, reduce by 1% for every 100m elevation. For more than 2000m, contact the manufacturer.

1.4.3 Installation Size

- **HR3-PR SIZE-A Size**

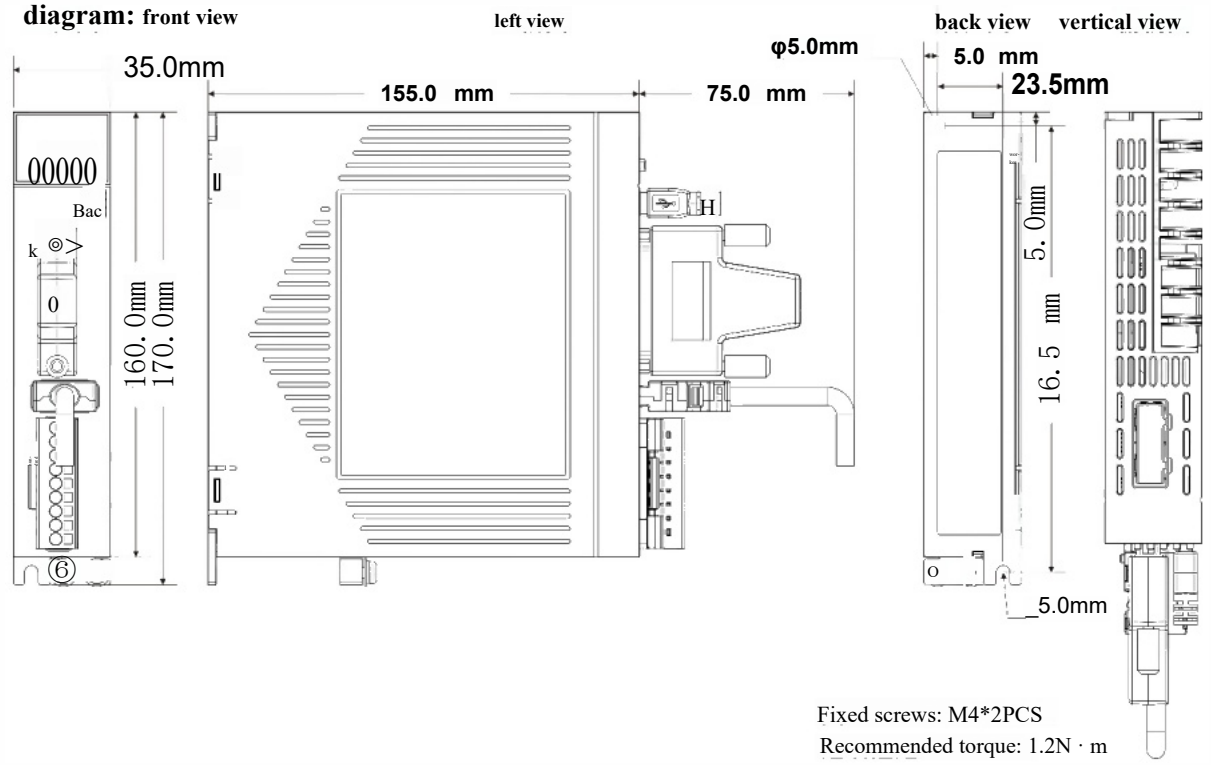

Figure 1-3 HR3-PR SIZE-A External Dimensions (mm)

- **HR3-PR SIZE-B size diagram:**

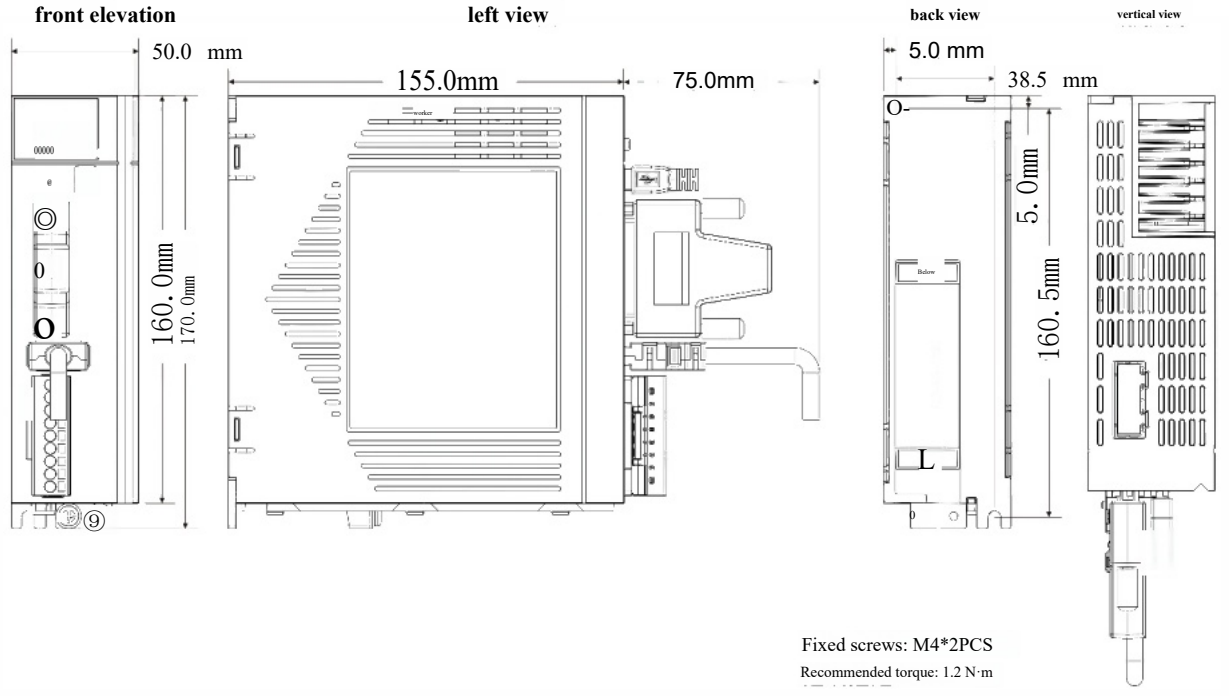

Figure 1-4 HR3-PR SIZE-B Shape and Size Diagram (unit: Mm)

1.4.4 Installation Precautions

Table 1-5 Precautions for Driver Installation

Installation requirements	**1.Ensure that the installation direction is perpendicular to the wall (the driver installation surface is 90° from the bottom, vertical upward).** **2.Use natural convection or fans to cool the servo driver.** **3.It is firmly fixed on the mounting surface through the servo driver installation hole. The screws and torque used for installation are shown in the figure above.** **4.During installation, the front of the driver is facing the operator for easy operation and maintenance.**
Heat dissipation requirements	1.To ensure the heat dissipation effect of the driver, please refer to the following figure to design the heat dissipation scheme of the electrical control cabinet. 2. Please install a cooling fan on the top of the servo driver to ensure that the ambient temperature of the servo driver is uniform and no local overheating occurs.
space requirement	1.When installing the retention distance, it is recommended to leave a distance of more than 10mm on both sides of the driver horizontally and more than 50mm on both sides vertically. 2.When compacting the installation, it is recommended to leave a distance of more than 1mm on both sides of the driver horizontally and more than 50mm on both sides vertically.

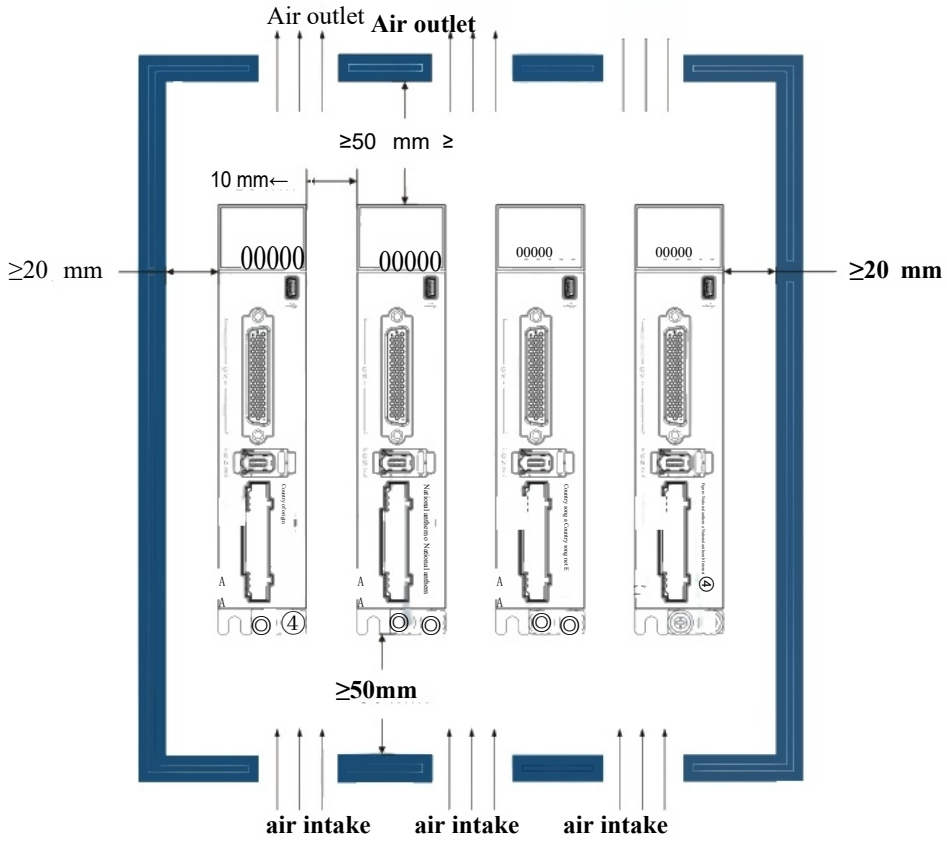

Figure 1-5 Schematic Diagram of Servo Driver Installation (installed With Reserved Spacing)

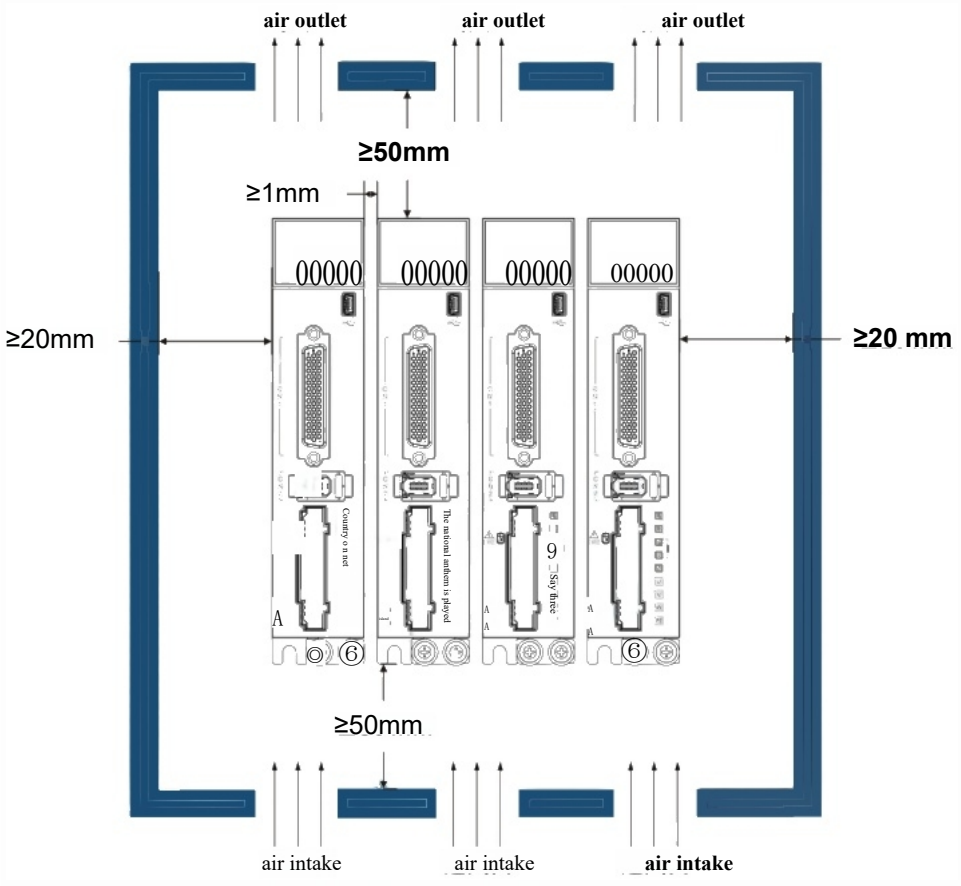

Figure 1-6 Schematic Diagram of Servo Driver Installation (compact Installation)

1.4.5 Landing

Be sure to ground the grounding terminal, otherwise there may be a risk of electric shock or interference causing misoperation.

Detailed information about electrical grounding is shown in 2.9 Grounding and Anti-interference measures.

1.4.6 Cabling Requirements

When wiring the driver, please run the cable downward (see the figure below) to avoid liquid flowing into the driver from the field and causing damage.

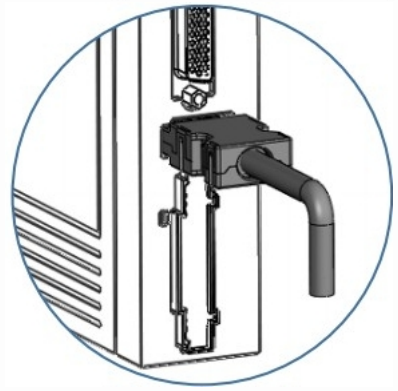

HR3-PR SIZE-A

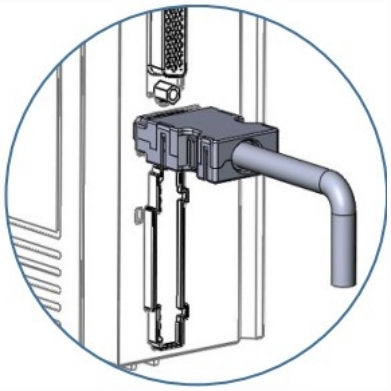

HR3-PR SIZE-B

Figure 1-7 Schematic Diagram of Servo Driver Cable Routing Requirements

Chapter 2 Wiring

2.1 System Wiring Description

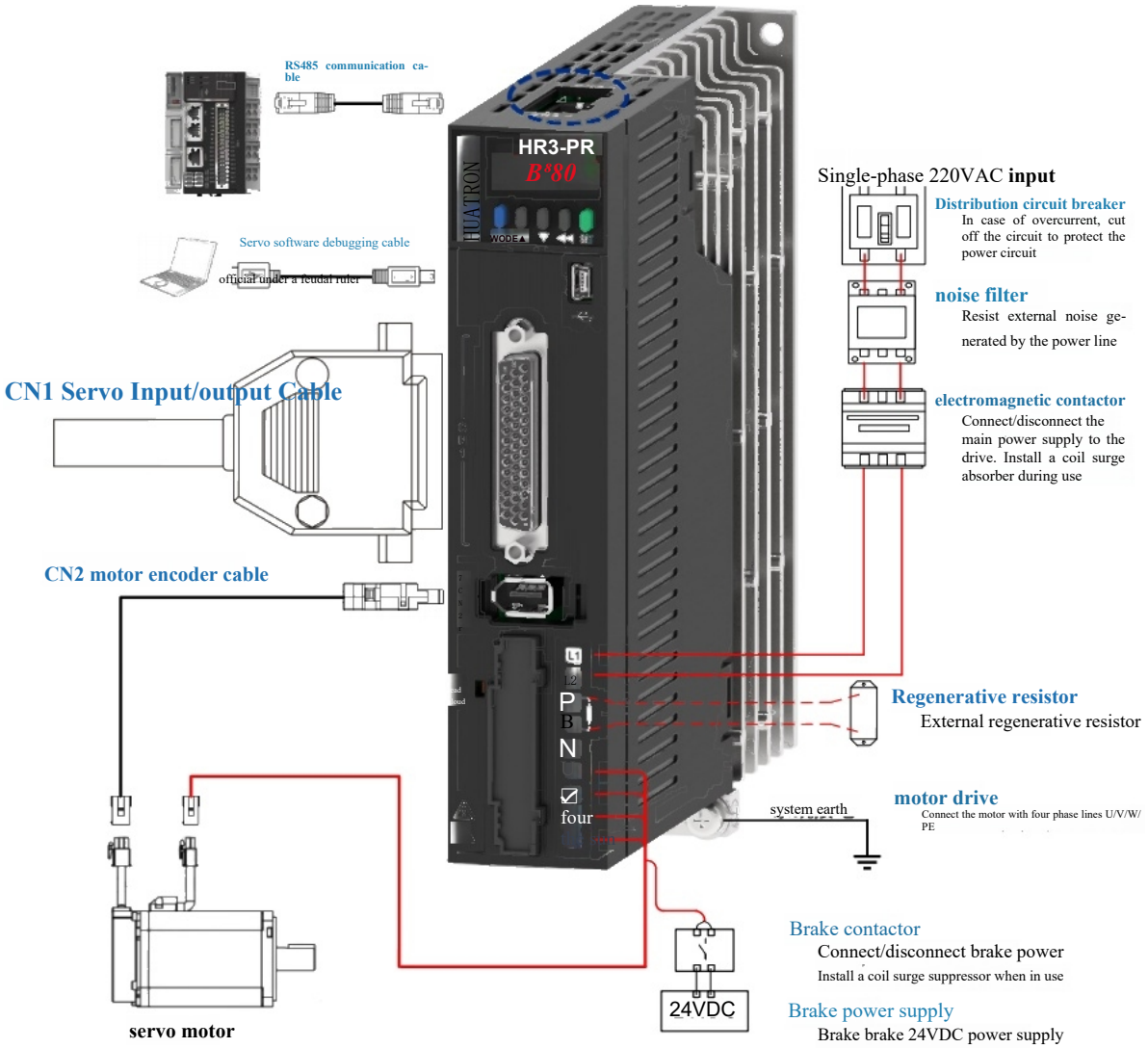

Figure 2-1 SIZE-A System Wiring Diagram

Use a circuit breaker with leakage protection and noise filter between the power supply and the main power terminal;

The voltage and power of the brake power supply shall meet the requirements of the motor brake parameters;

> Size-A no built-in regenerative resistor is required. For applications requiring an external regenerative resistor, refer to Section 2.4.3 for the selection of appropriate resistors. Do not use a minimum external resistance value allowed in Table 2-3, otherwise the driver may be damaged.

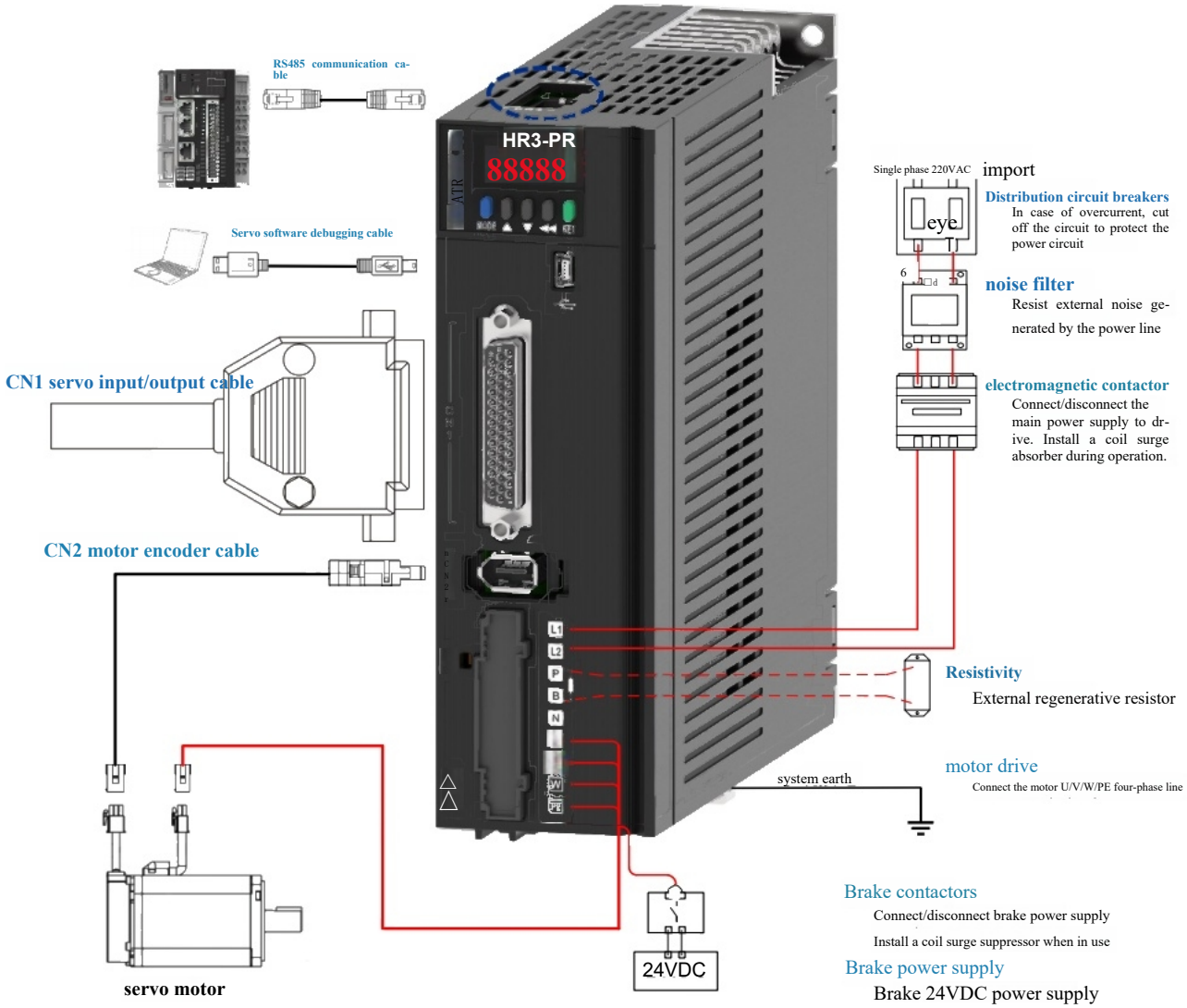

Figure 2-2 SIZE-B System Wiring Diagram

> Use a circuit breaker with leakage protection and noise filter between the power supply and the main power terminal;

The voltage and power of the brake power supply shall meet the requirements of the motor brake parameters;

SIZE-B Without built-in regenerative resistor, if you need to use an external regenerative resistor, please refer to Chapter 2.4.3 to select the appropriate resistor. Do not use less than the minimum external resistance value allowed in Table 2-3, otherwise the driver may be damaged.

2.2 Control Signal Port Definition

Driver Control Signal Port Definition



	CN3(IN)		CN4(OUT)	
	pin No	Signal name	pin No	Signal name
RS485 communication terminal	4	RS485+	4	RS485+
	5	RS485-	5	RS485-
	8	GND	8	GND

	pin No	Signal name
MINI USB	1	VBUS
	2	D-
	3	D+
	4	
	5	GND

CN1	pin No	Signal name	pin No	Signal name	pin No	Signal name
IO junctor DB44	1	DO4+	16	GND	31	DI7
	2	DO3-	17	+24V	32	DI6
	3	DO3+	18	AI2	33	DI5
	4	DO2-	19	GND	34	DI3
	5	DO2+	20	AI1	35	PULLHI
	6	DO1-	21	PAO+	36	HPULSE-
	7	DO1+	22	PAO-	37	SIGN+
	8	DI4	23	PBO-	38	HPULSE+
	9	DI1	24	PZO-	39	SIGN-
	10	DI2	25	PBO+	40	HSIGN-
	11	COM+	26	DO4-	41	PULSE+
	12		27	DO5-	42	HSIGN+
	13	PZO+	28	DO5+	43	PULSE-
	14	COM-	29	GND	44	OCZ
	15		30	DI8		

CN2	pin No	Signal name
Encoder connection implement 1394-6P	1	5V
	2	GND
	3	
	4	
	5	SD+
	6	SD-

terminal marking	Port name
L1、L2	Master circuit power input terminal regeneration function servo motor connection terminal
P、B、N	
U、V、W、PE	

2.3 Power Terminal Definition and Wiring Instructions

2.3.1 Power Supply and Motor Terminal Definition

Table 2-1 SIZE-A/B Main Circuit Terminal Definitions

junctor	terminal order number	terminal grade	Port functionality	explain
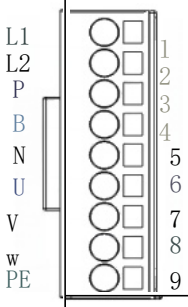	1	L1	Master power input	Single-phase AC 200V-240V, -10~+10%,50/60Hz
	2	L2		
	3	P	Regenerative capacity	When the regeneration function is applied, P and B terminals are used. See Section 2.4 for details.
	4	B		
	5	N		
	6	U	motor drive	Connect the three phases U, V and W of the servo motor and the PE terminal of the motor.
	7	V		
	8	W		
	9	PE		

2.3.2 Kafka-Style Terminal Wiring Method

The power terminal uses a snap connector for convenient and quick wiring. Please follow the flow chart below to ensure reliable connection.

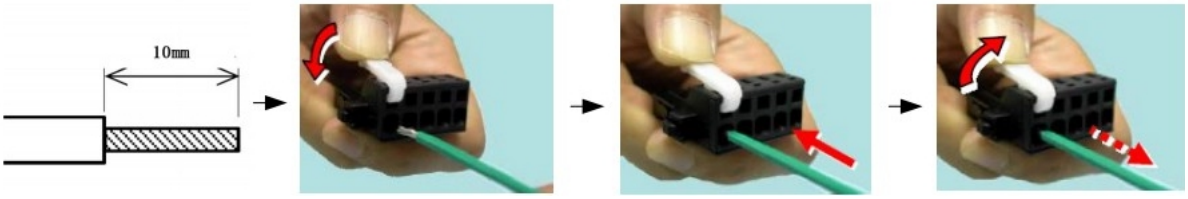

① Strip the insulation of the wire, and the bare wire length is 10mm.

② Press the push rod to press down the internal spring.

③ Insert all bare wires into the connector.

④ Loosen the control lever and pull the wire gently to confirm that the connection is secure.

Figure 2-3 Terminal Wiring Method With Spring

2.3.3 Example of Main Circuit Wiring

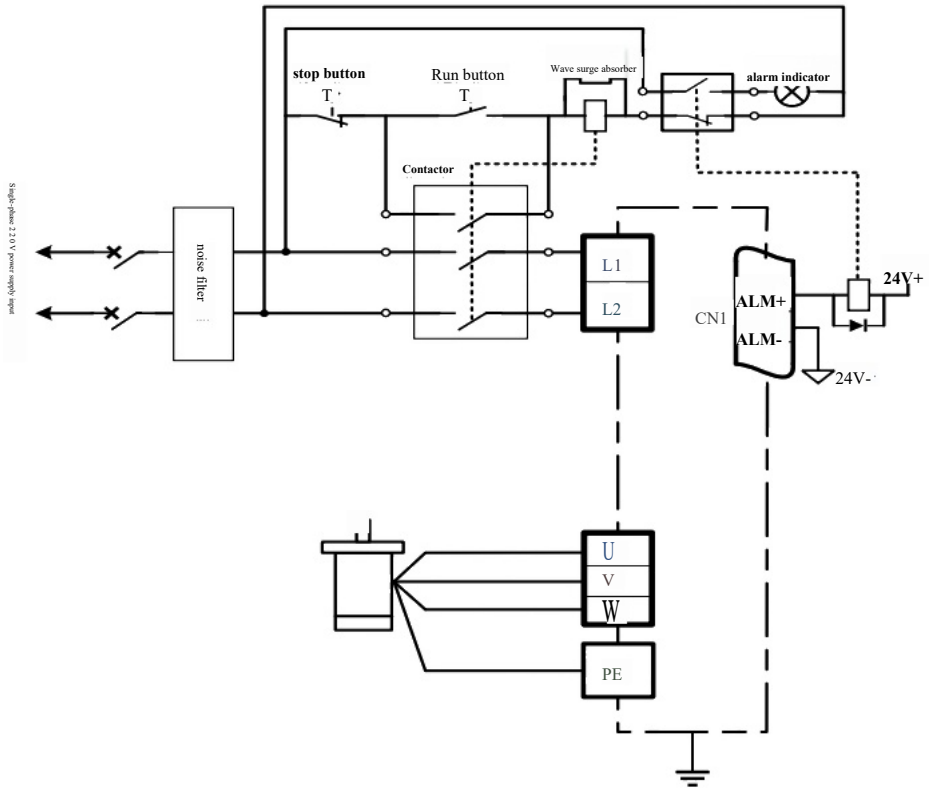

Figure 2-4 SIZE-A/B Main Circuit Wiring Example

Do not connect the power input (L1, L2) to the motor output terminal (U, V, W);

The wiring of the motor output terminals (U, V, W) is consistent with that of the motor (U, V, W), and the order should not be wrong;

Do not connect the regenerative resistor between P and N terminals, otherwise it may cause damage to the servo and regenerative resistor, or even cause fire due to overheating of the regenerative resistor;

Do not wire the power cord and signal wire together, keep a distance of more than 30cm between them;

Please do not switch the power supply of the servo frequently, otherwise it will cause the servo to charge the capacitor frequently internally, and the load of the pre-charging circuit is too large, resulting in performance degradation. The switching frequency should be controlled below 1 time per minute;

After the servo is powered off, there may still be residual high voltage inside. After 15 minutes of power shutdown, wiring and other operations can be performed only after the power indicator light is turned off.

2.3.4 Main Return Cable Specifications

Table 2-2 Recommended Cable Specifications for the Main Circuit

series	Driver model	L1、L2、L3		P、B		U、V、W		PE	
		mm²	AWG	mm²	AWG	mm²	AWG	mm²	AWG
		uniphase		220V power supply					
SIZE-A	0R8S2	2x0.75	18	2x0.75	18	3x0.75	18	0.75	18
	1R6S2	2x0.75	18	2x0.75	18	3x0.75	18	0.75	18
	2R8S2	2x0.75	18	2x0.75	18	3x0.75	18	0.75	18
SIZE-B	5R5S2	2x0.75	18	2x0.75	18	3x0.75	18	0.75	18
	7R6S2	2x1.00	17	2x1.00	17	3x1.00	17	1.00	17
SIZE-C	012S2	2x1.50	15	2x1.50	15	3x1.50	15	1.50	15
	014S2	2x2.00	14	2x2.00	14	3x2.00	14	2.00	14
Three-phase 220V power supply									
SIZE-C	012S2	3x1.00	17	2x1.50	15	3x1.50	15	1.50	15
	014S2	3x1.50	15	2x2.00	14	3x2.00	14	2.00	14

2.4 Resistor Wiring Instructions

2.4.1 Resistor Wiring

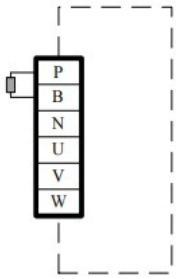

P-B with an external resistor in the middle,
The configuration is an external regenerative resistor

Figure 2-5 Reconstructed Resistor Wiring

For applications requiring the use of an external regenerative resistor, refer to Chapter 2.4.3 for the selection of the appropriate resistor. Do not use less than the minimum external resistance allowed in Table 2-3, otherwise the driver may be damaged;

The external resistance is connected between P-B;

Do not connect the regenerative resistor between bus P and N, otherwise it will cause driver damage and fire;

Before using the servo, please confirm that the parameters related to the external regenerative resistor are correctly set: P02.34 (regenerative resistor selection), PO2.39 (power of the external regenerative resistor), and P02.40 (resistance value of the external regenerative resistor).

2.4.2 Resistors Specifications

Table 2-3 Specifications of Regenerative Resistor

servo drivers **Rated voltage, current**		**Minimum resistance of external connection**	**Maximum capacitive absorption of braking energy Ec**
Single phase 220V	0.8A	509/50W	5J
	1.6A	500/50W	10J
	2.8A	45Ω/50W	15J
	5.5A	400/50W	26J
	7.6A	20Ω/80W	26J
Single/Three phase 220 V	12A	20Ω/80W	44J
	14A	20Ω/80W	53J

2.4.3 Resistor Selection Calculation

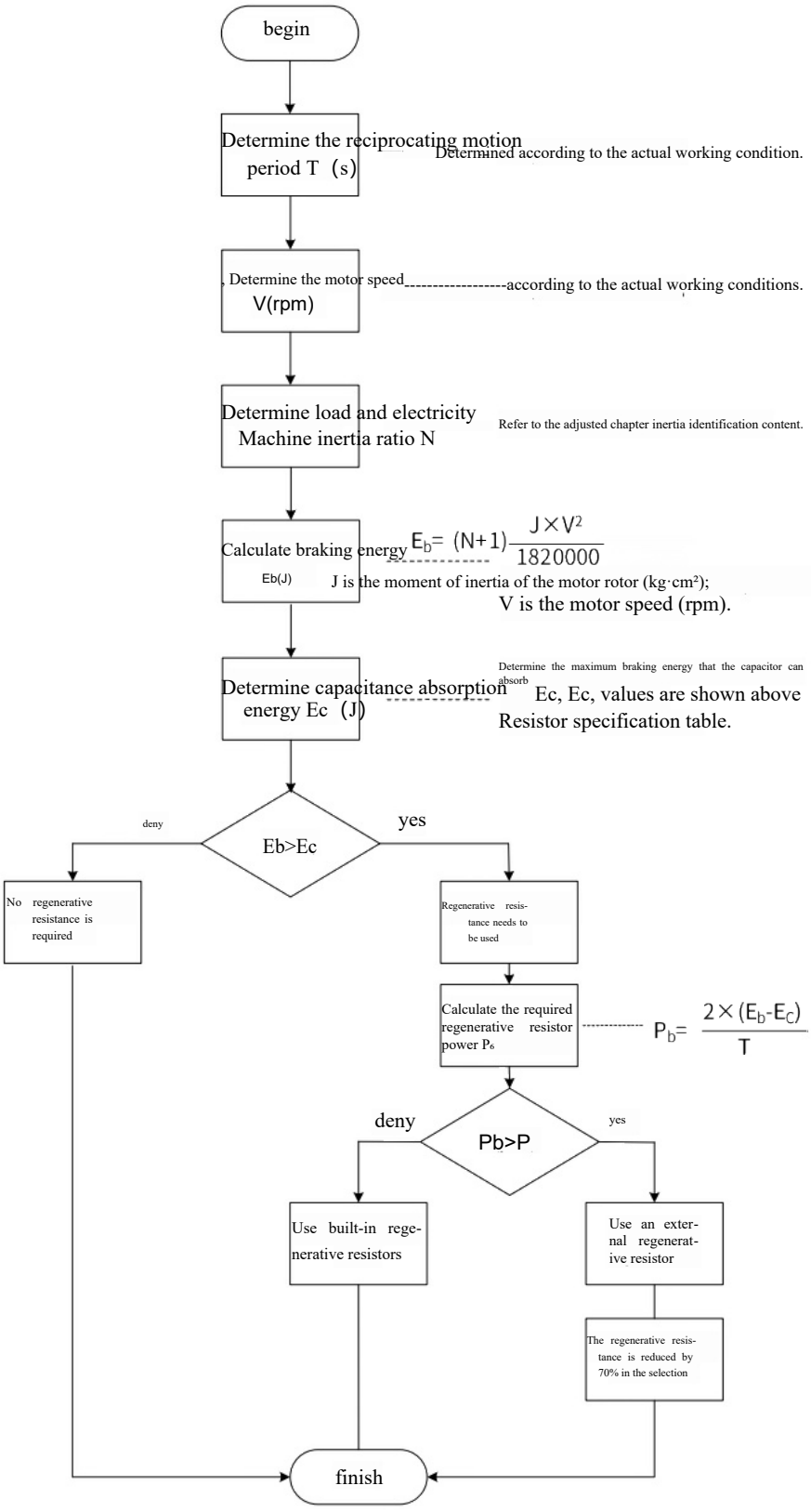

Figure 2-6 Selected Flow Process of Renewable Resistance

Example: The rated current of the driver is 5.5A, the reciprocating motion is made with a 1s cycle, the speed is 3000rpm, the rotor inertia is 1.01kg cm ², and the load inertia ratio is 9.

1. Confirm that the reciprocating motion cycle of the motor is 1s.

2. Confirm that the motor speed is 3000rpm.

3. Confirm that the load inertia ratio is 9.

4. Calculate renewable energy

$$E_b = (9+1)\frac{1.01 \times 3000^2}{1820000} = 50J$$

5. According to the specification table of the regenerated resistor above, Ec=26J.

6. Eb (50J)>Ec (26J), the regenerative energy is greater than the capacitive absorption energy, and the regenerative resistor needs to be used.

7. Calculate the power of the regenerative resistor

$$P_b = \frac{2 \times (50-26)}{1} = 48W$$

8、 Comparing Pb (48W)>P.(25W), an external regenerative resistor is required.
The P value is shown in the above regeneration resistance specification table.

9. Regenerative resistor power P=Pb/70%=68.5W, select 70W resistor.

2.5 Catcher Wiring Instructions

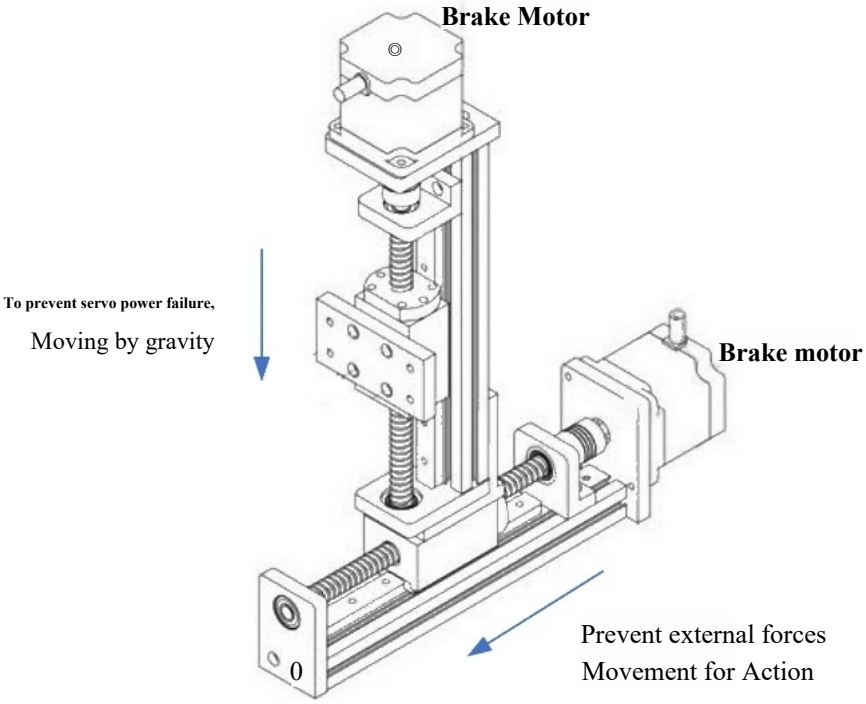

Figure 2-7 Application Diagram of Gate Latch

The motor brake is used to stop the unexpected movement of the moving load (such as the drop under gravity) when the servo system is not activated (such as the power failure of the servo system), so as to prevent the accidental movement of the servo motor after power failure due to its own weight or external force.

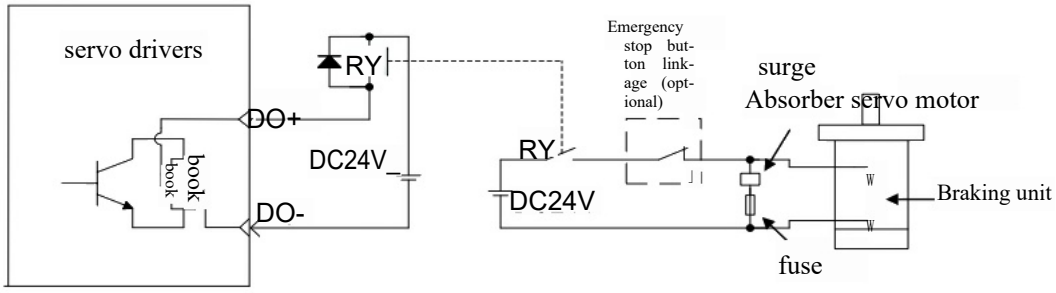

Figure 2-8 Barring Wiring Diagram

The brake mechanism in the servo motor is only used for the motor's stop brake. Frequent use of the motor brake for emergency stop operation will shorten its service life. When the speed of the servo motor is less than 20 rpm, the brake power supply is allowed to be disconnected;

Brake is recommended to use a separate power supply to prevent the voltage drop caused by other electrical appliances, resulting in brake misoperation;

Different power supplies are used to supply power to the brake and brake control signal respectively to avoid electromagnetic interference to electronic components.

2.6 Control Signal CN1 Port Definition and Wiring Description

2.6.1 Control Signal CN1 Port Definition

Table 2-4 Control Signal CN1 Port Definition

IF interface connector (CN1)	Module name	Signal name	Pin number	Default functions
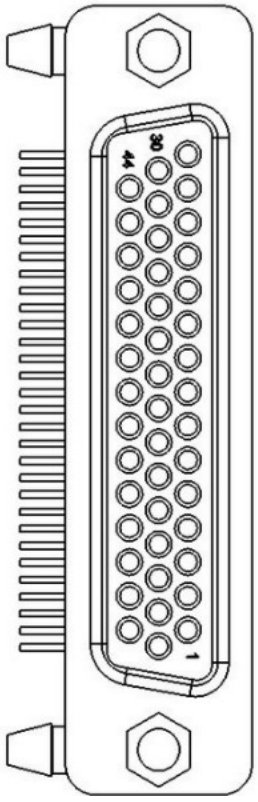 HDR44P	Digital input	DI1	9	Positive Limiting
		DI2	10	Reverse Limitation
		DI3	34	Origin switch
		DI4	8	Servo enablement
		DI5	33	Fault reset
		DI6	32	Location bias clearance
		DI7	31	Zero speed holding
		DI8	30	Undefined
		COM+	11	DI common port
	Digital output	DO1+	7	Zero speed signal
		DO1−	6	
		DO2+	5	Servo operation
		DO2−	4	
		DO3+	3	Servo fault output
		DO3−	2	
		DO4+	1	Location reached
		DO4−	26	
		DO5+	28	Zero return completed
		DO5−	27	
	Frequency division output	PAO+	21	A phase division output signal
		PAO−	22	
		PBO+	25	B phase frequency division output signal
		PBO−	23	

IF interface connector (CN1)	Module name	Signal name	Pin number	Default functions
		PZO+	13	Z phase frequency division output signal
		PZO-	24	
		OCZ	44	The Z-phase collector of the encoder is open circuit and outputs a signal
		GND	29	Ground for frequency division output signal
	Positioning instructions	PULSE+	41	Low speed pulse instruction input interface
		PULSE-	43	
		SIGN+	37	
		SIGN-	39	
		PULLHI	35	Power input interface for command pulse
		HPULSE+	38	High speed input pulse instruction
		HPULSE-	36	
		HSIGN+	42	High speed position symbol
		HSIGN-	40	
	read analogue input	AI1	20	Analog input signal 1
		AI2	18	Analog input signal 2
		GND-AI	16	Analog input signal ground
		GND-AI	19	Analog input signal ground
	24V output power supply	+24V	17	24V output power supply
		COM-	14	
	hull	—	—	Connect cable shielding layer

2.6.2 Instructions for Digital Input Wiring

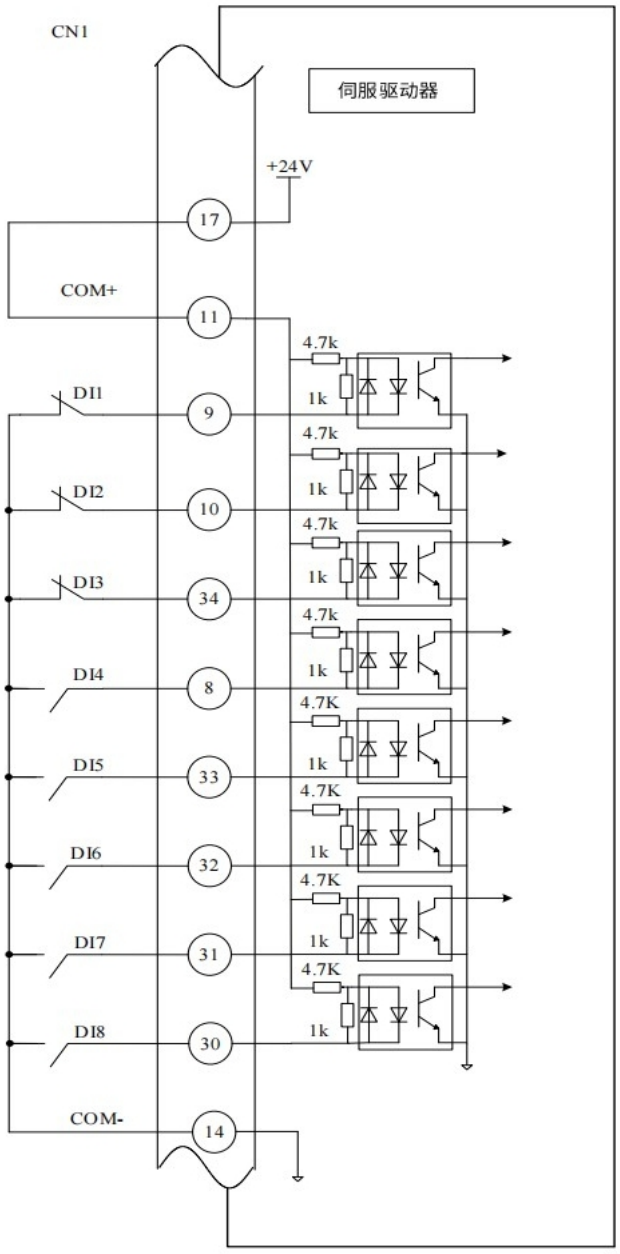

Figure 2-9 Digital Input Wiring

(1) When the upper device is a relay output

a) **When using the internal 24V power supply of the servo driver**

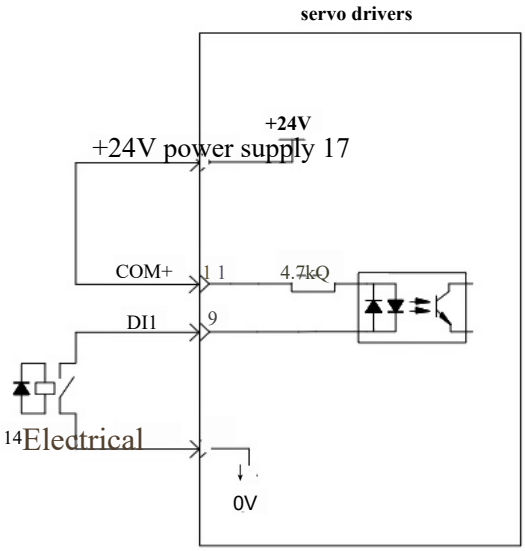

Figure 2-10 Digital Input Wiring Diagram (relay Output, Using Internal Power Supply)

b) When using an external power supply

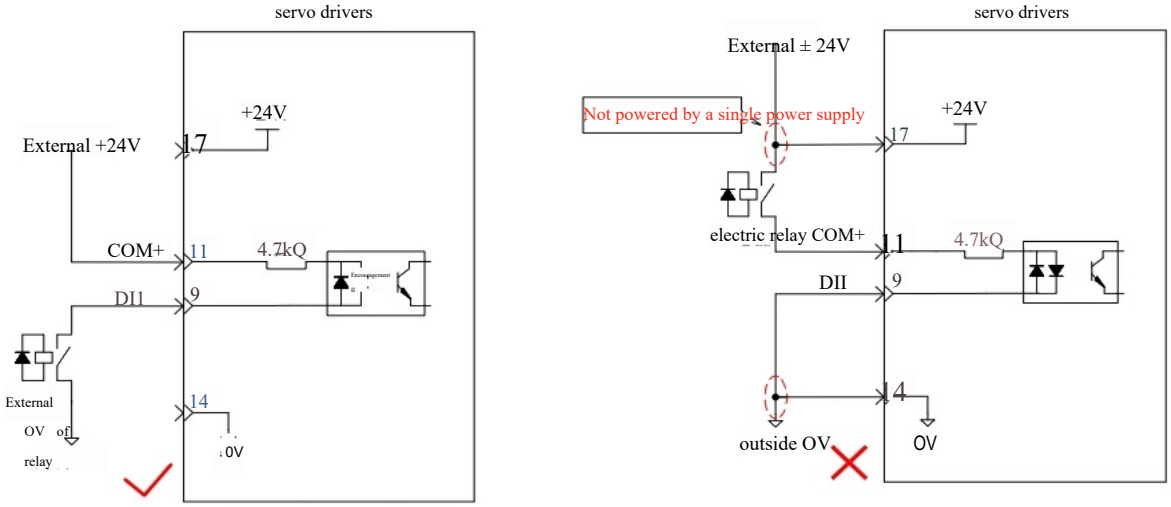

Figure 2-11 Digital Input Wiring Diagram (relay Output, Using External Power Supply)

(2) When the upper device is open circuit at the collector

a) **Use the 24V power supply inside the servo driver**

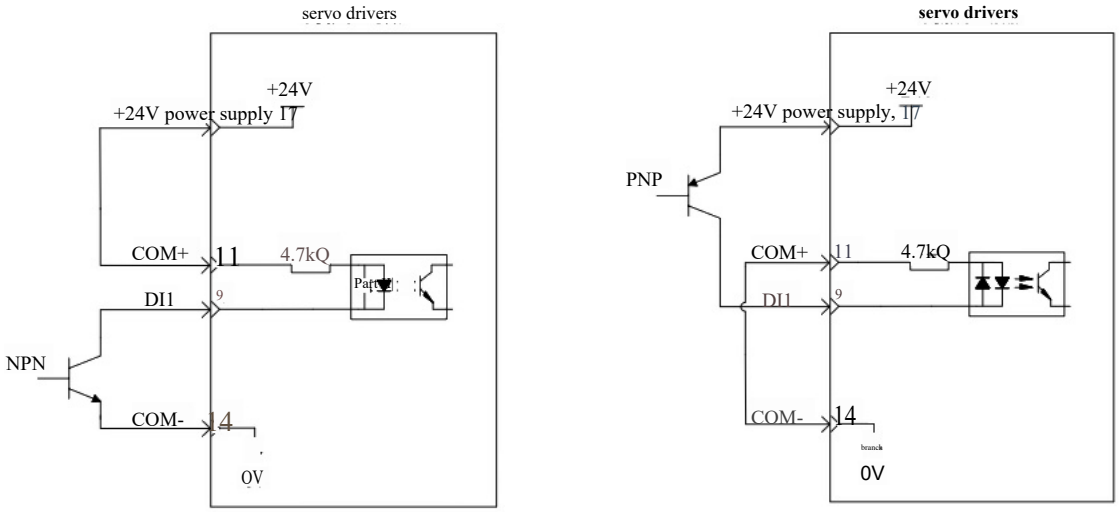

Figure 2-12 Digital Input Wiring Diagram (open Collector, Using Internal Power Supply)

b) **When Using an External 24V Power Supply**

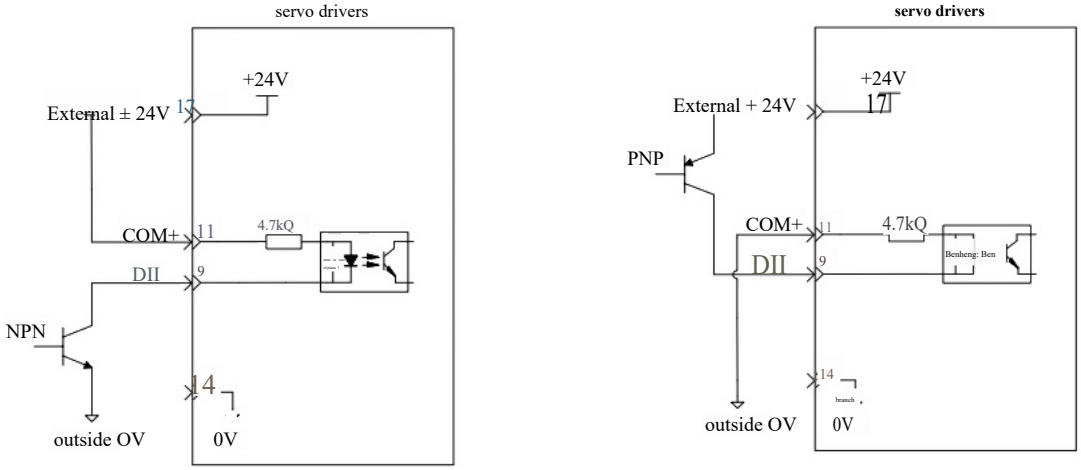

Figure 2-13 Digital input wiring diagram (open collector, using external power supply) does not support PNP and NPN inputs mixed use.

2.6.3 Description of Digital Output Wiring

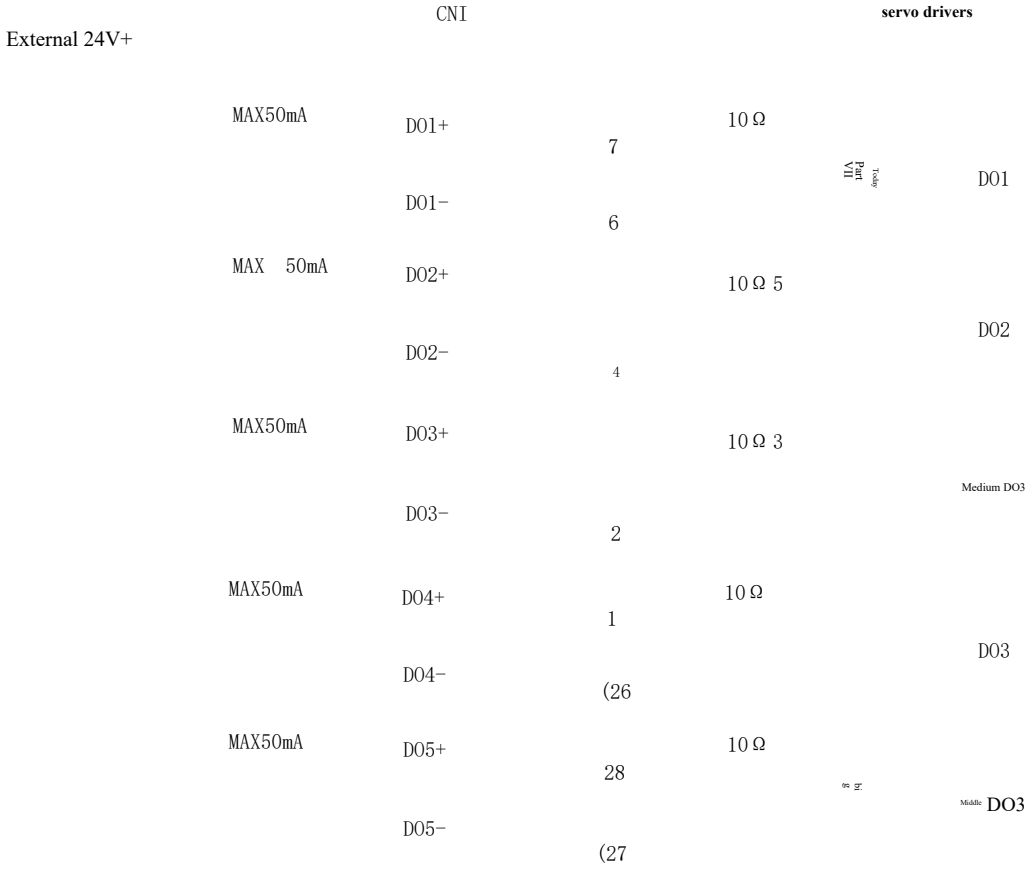

Figure 2-14 Digital Output Wiring

The maximum allowable voltage and current capacity of the internal optocoupler output circuit of the servo driver are as follows:

- **Voltage: DC30V (maximum);**
- **Current: DC50mA (maximum).**

(1) When the upper device is a relay input

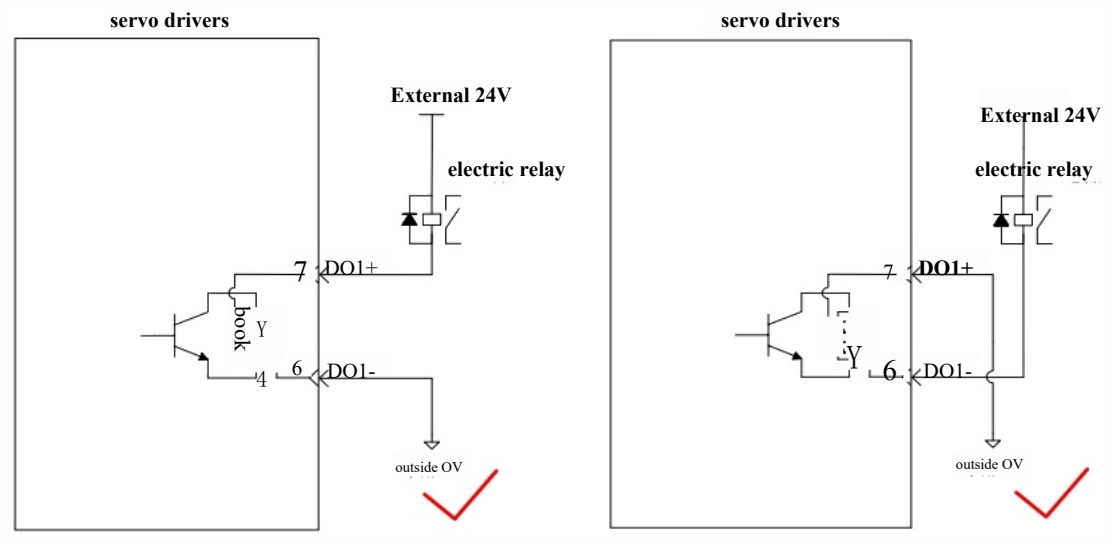

Figure 2-15 Digital Output Wiring Diagram (relay Input, Correct Wiring)

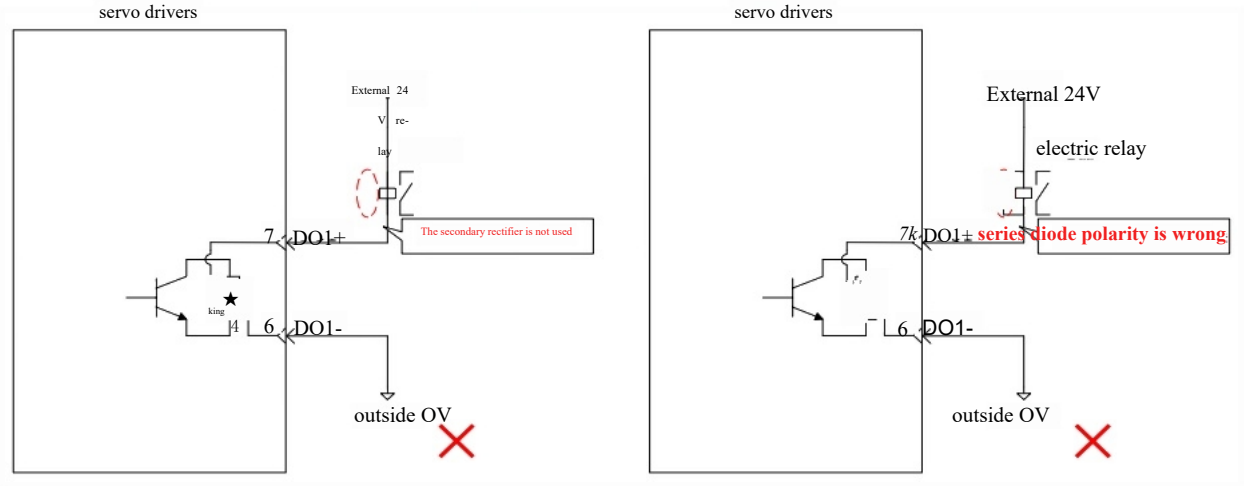

Figure 2-16 Digital Input/output Wiring Diagram (relay Input, Wrong Wiring)

(2) When the upper device is an optocoupler input

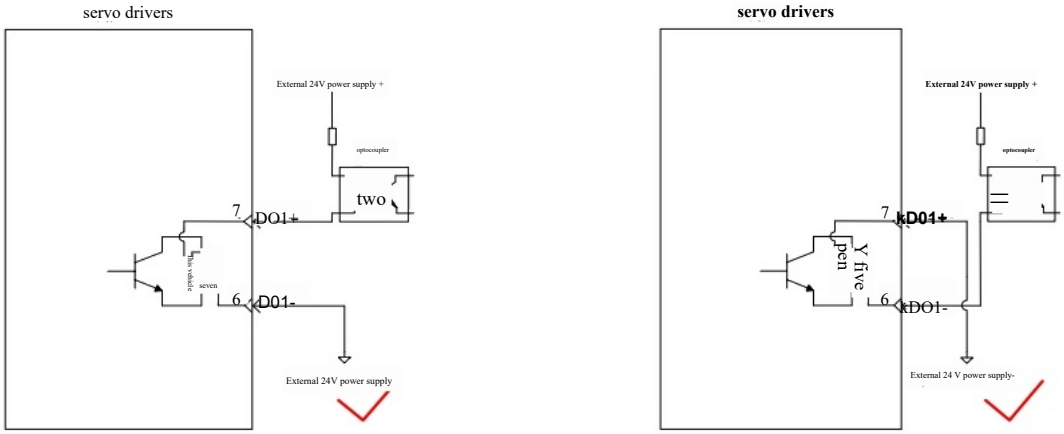

Figure 2-17 Digital Output Wiring Diagram (opto-Coupler Input, Correct Wiring)

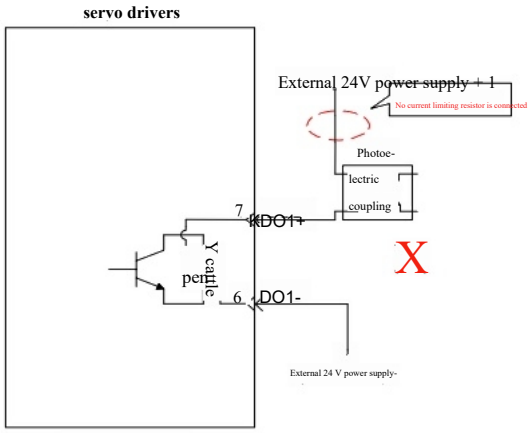

Figure 2-18 Digital Output Wiring Diagram (opto-Coupler Input, Wrong Wiring)

2.6.4 Description of Frequency Division Output Wiring

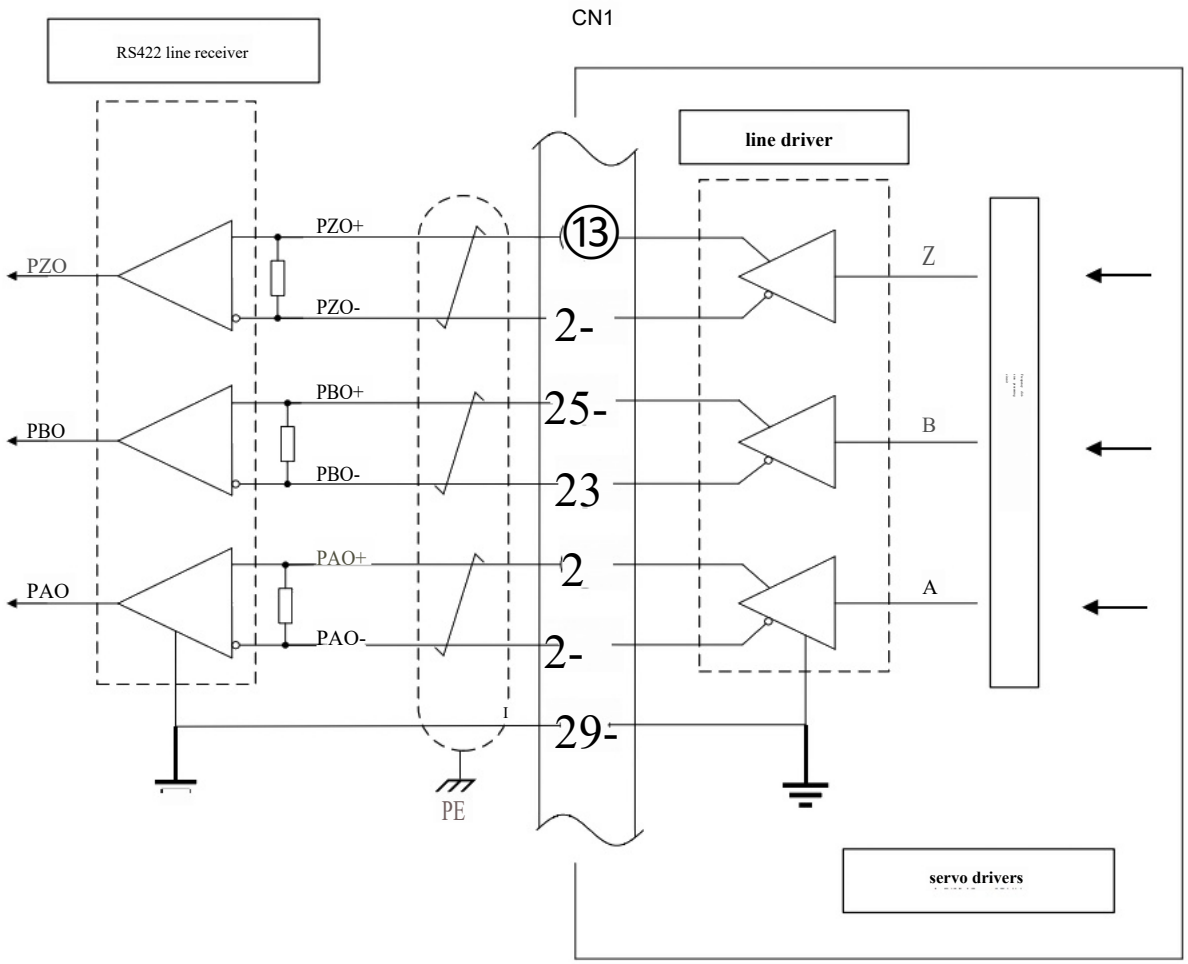

Figure 2-19 Frequency Division Output Wiring

For receiving the output pulse signal, use RS422 long line receiver (AM26C32 or equivalent); the maximum output current of frequency division output is 20mA;

The cable is double-stranded shielded wire, the shielding layer is connected to PE, and the frequency division transmission signal ground is connected to the receiving end ground.

2.6.5 Location Instruction Wiring Description

(1) Low speed pulse instruction input

1) When It's a Differential Approach

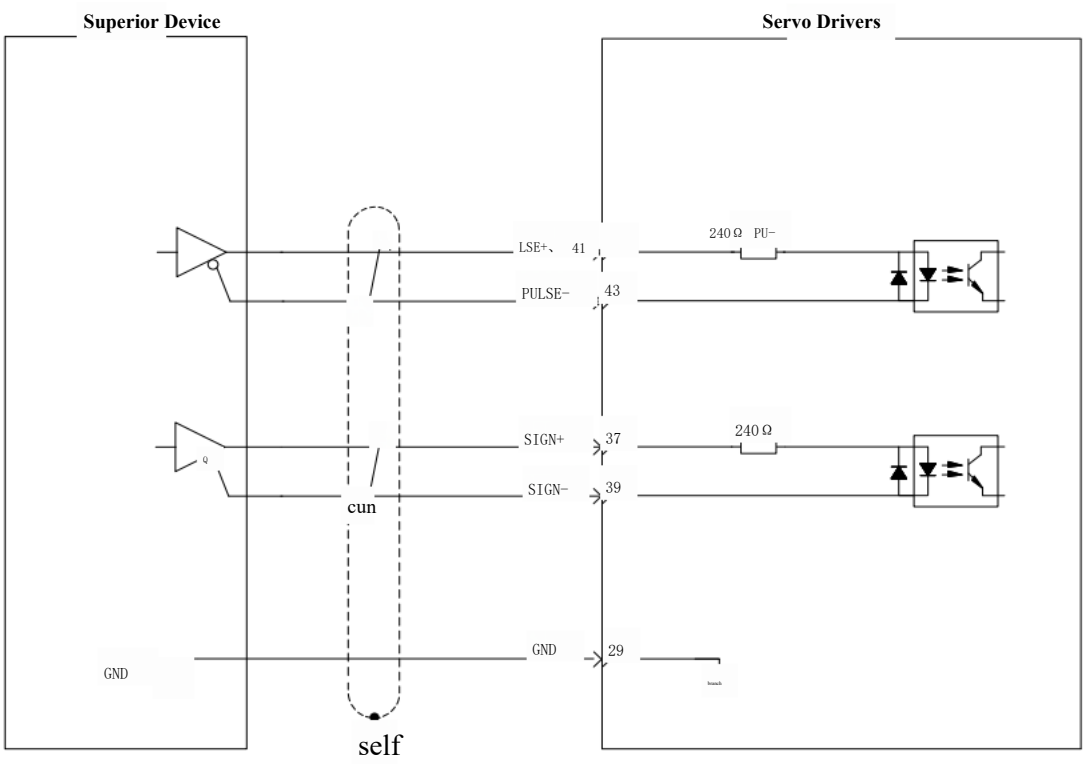

Graph 2-20 Low speed pulse instruction input wiring diagram (differential mode)

2) When the Collector Is Open

Scheme 1: Use the internal resistance of the servo driver

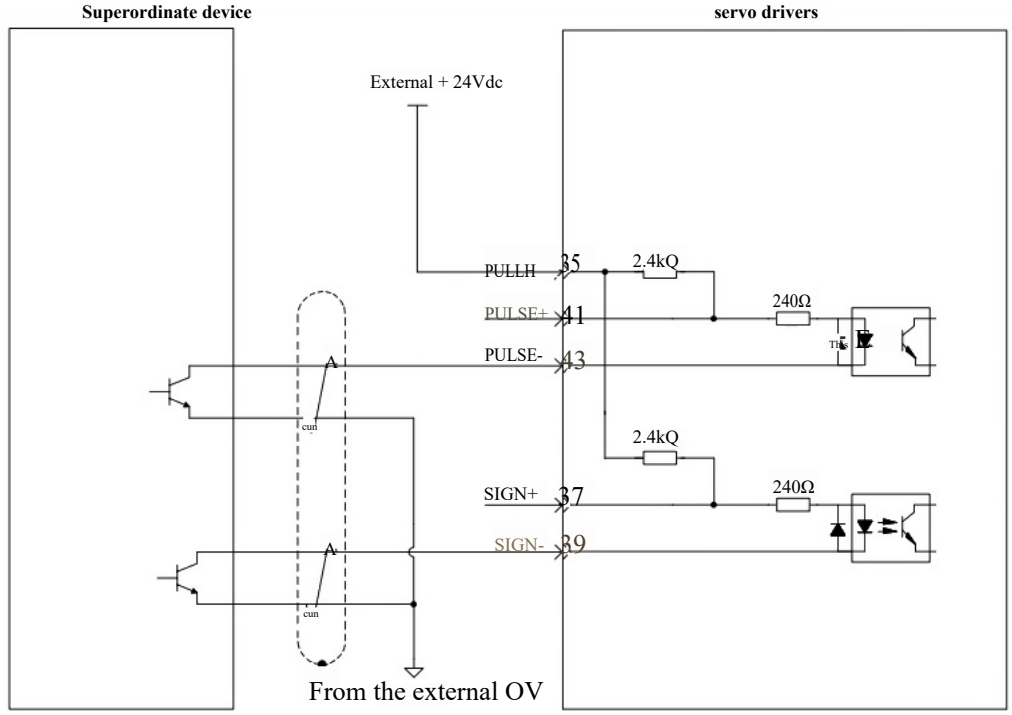

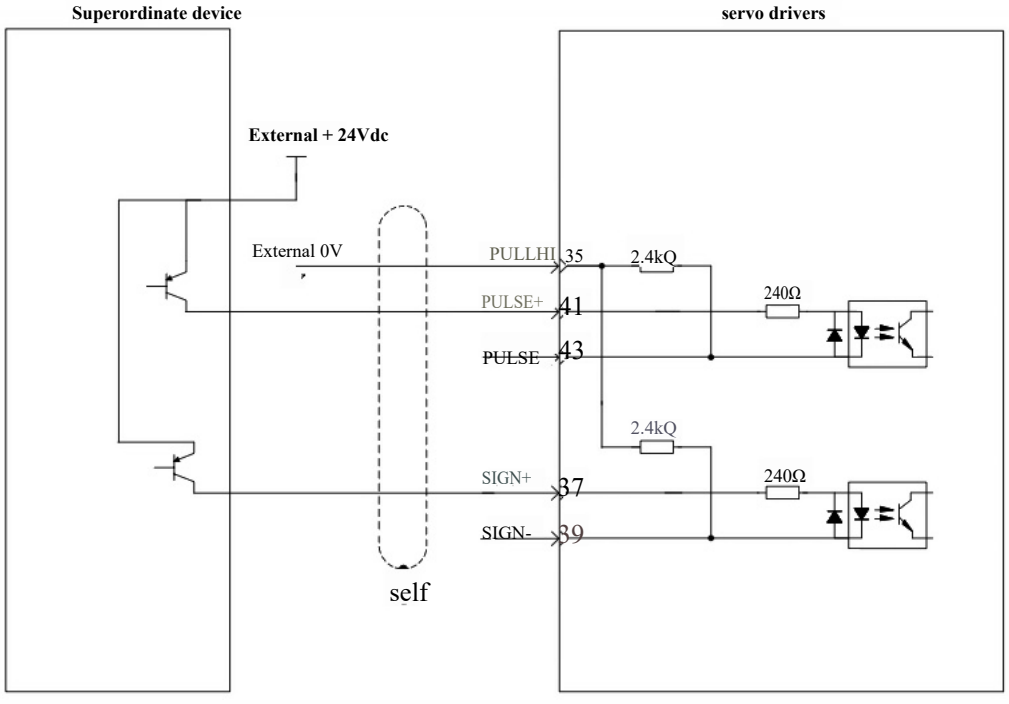

Figure 2-21 Low-Speed Pulse Instruction Input Wiring Diagram (cathode Open Circuit Mode-Using Internal Resistance)

Scheme 2: Use an external resistor

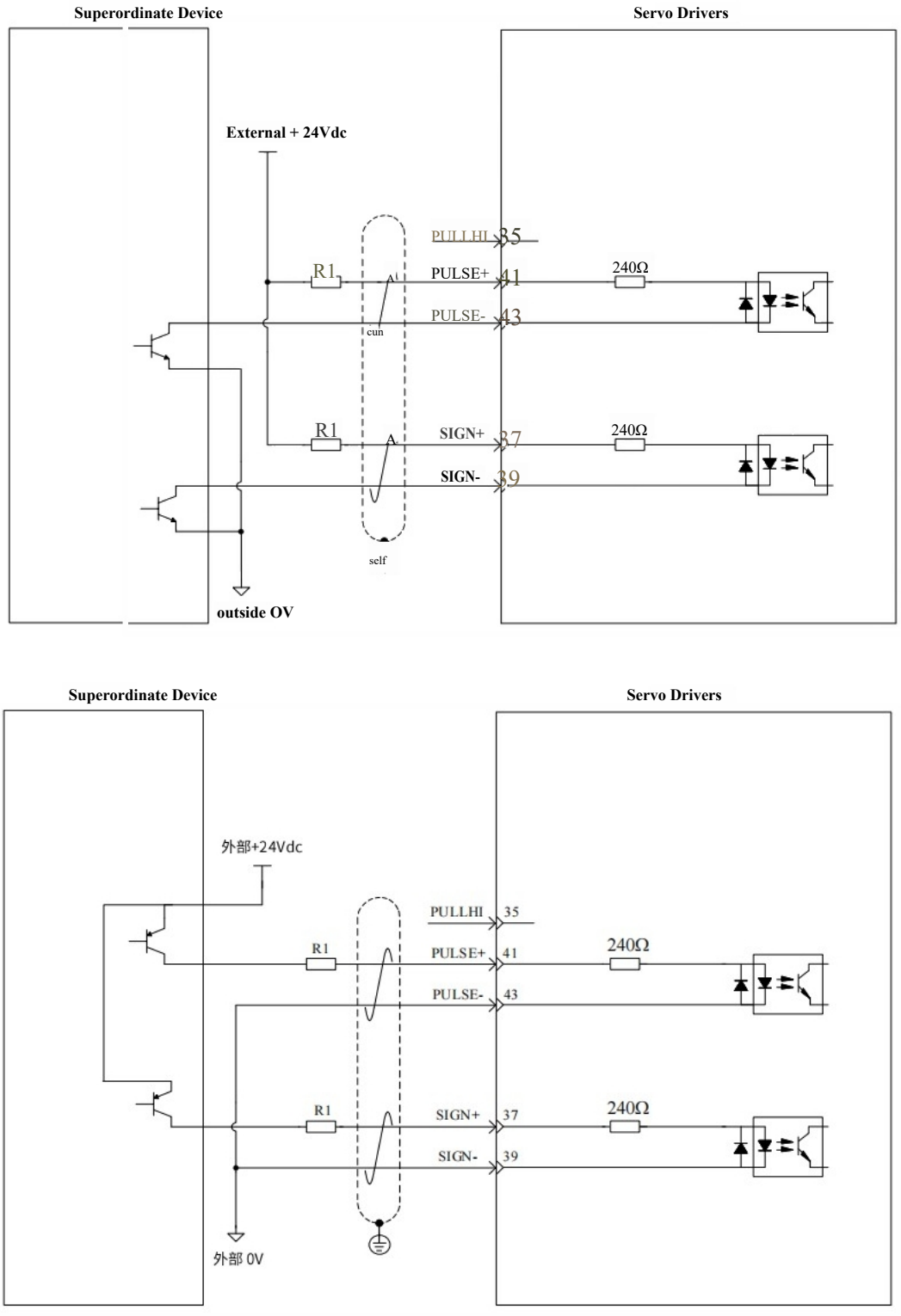

Figure 2-22 Low-Speed Pulse Instruction Input Wiring Diagram (collector Open Circuit Mode-External Resistance)

The selection of resistor R1 should satisfy the formula: $\frac{Vcc-1.5}{R1+240}=10mA$

Table 2-5 Recommended R1 Resistance

Vcc voltage	R1 resistance	R1 power
24V	2.4k Ω	0.5k Ω
12V	1.5k Ω	0.5k Ω

Example of a wiring error:

■ **Error 1: The current limiting resistor is not connected, resulting in the burnout of the port**

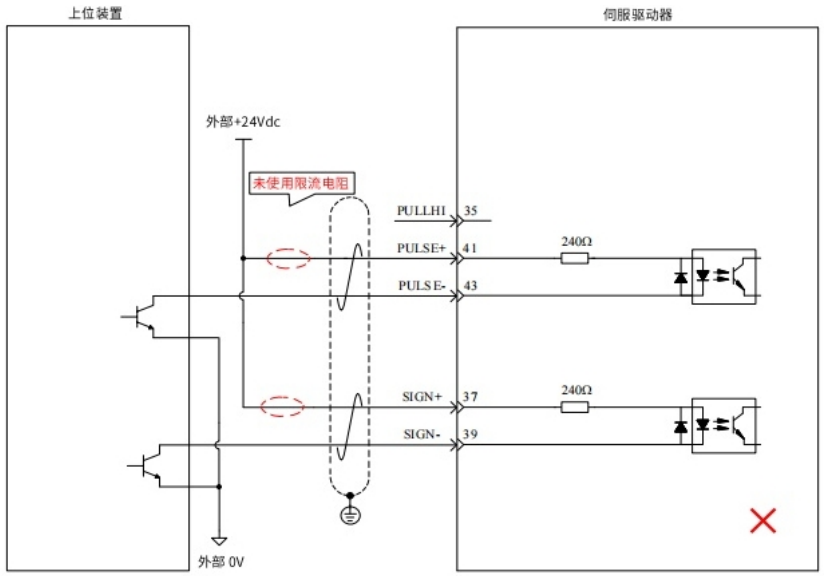

Figure 2-23 Low-Speed Pulse Instruction Input Wiring Diagram (wrong Wiring 1)

■ Error 2: Multiple ports share a limiting resistor, resulting in pulse reception errors

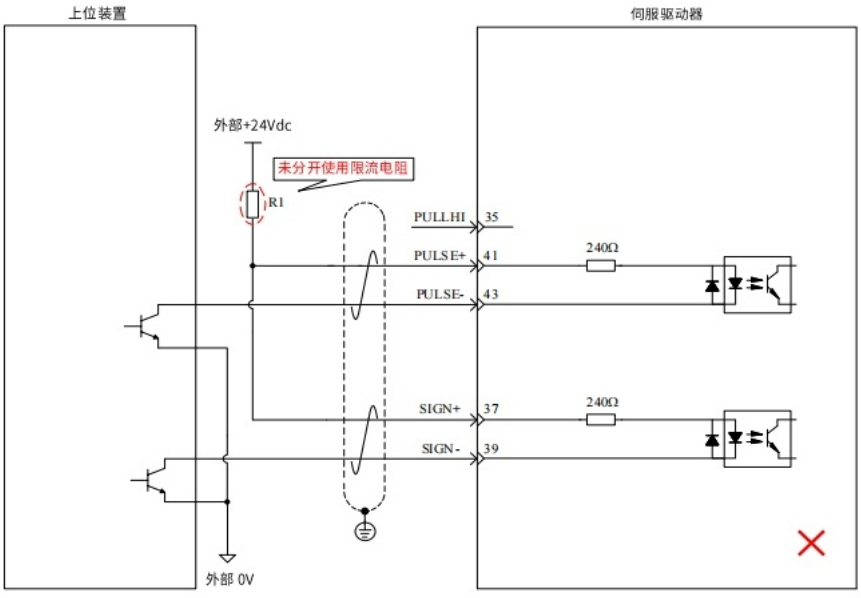

Figure 2-24 Low-Speed Pulse Instruction Input Wiring Diagram (wrong Wiring 2)

■ **Error 3: The SIGN port is not connected, so the pulses can not be received by these two ports**

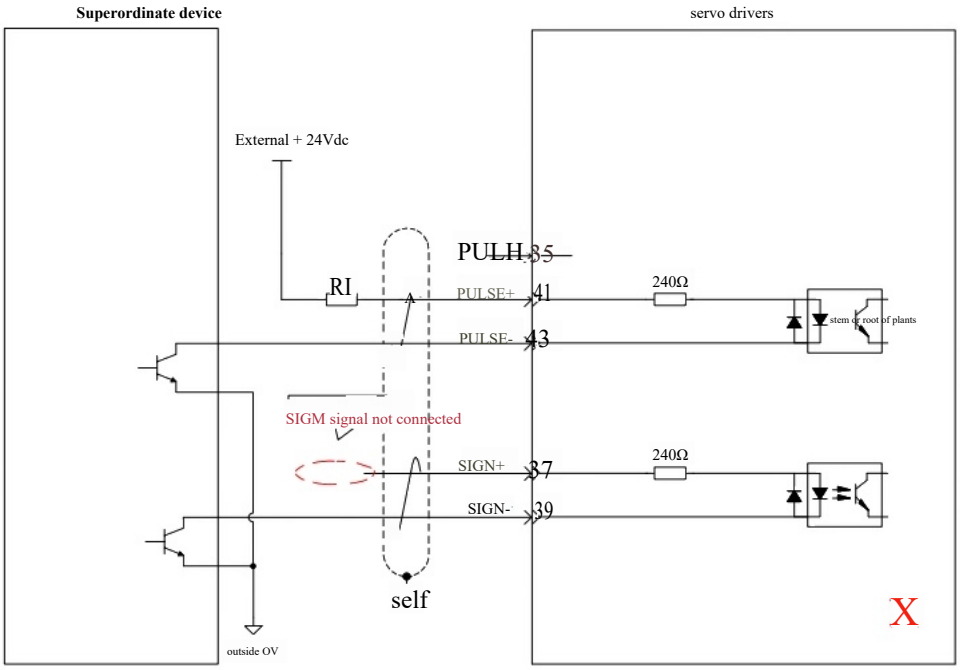

Figure 2-25 Low-Speed Pulse Instruction Input Wiring Diagram (wrong Connection 3)

■ Error 4: The port is connected incorrectly, resulting in the burnout of the port

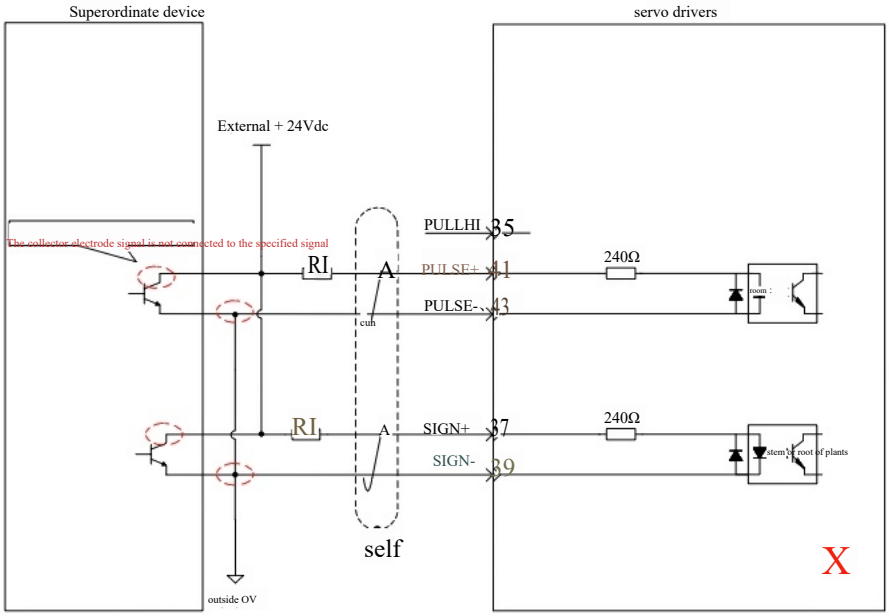

Figure 2-26 Low Speed Pulse Instruction Input Wiring Diagram (wrong Connection 4)

■ **Error 5: Multiple ports share a limiting resistor, resulting in pulse reception errors**

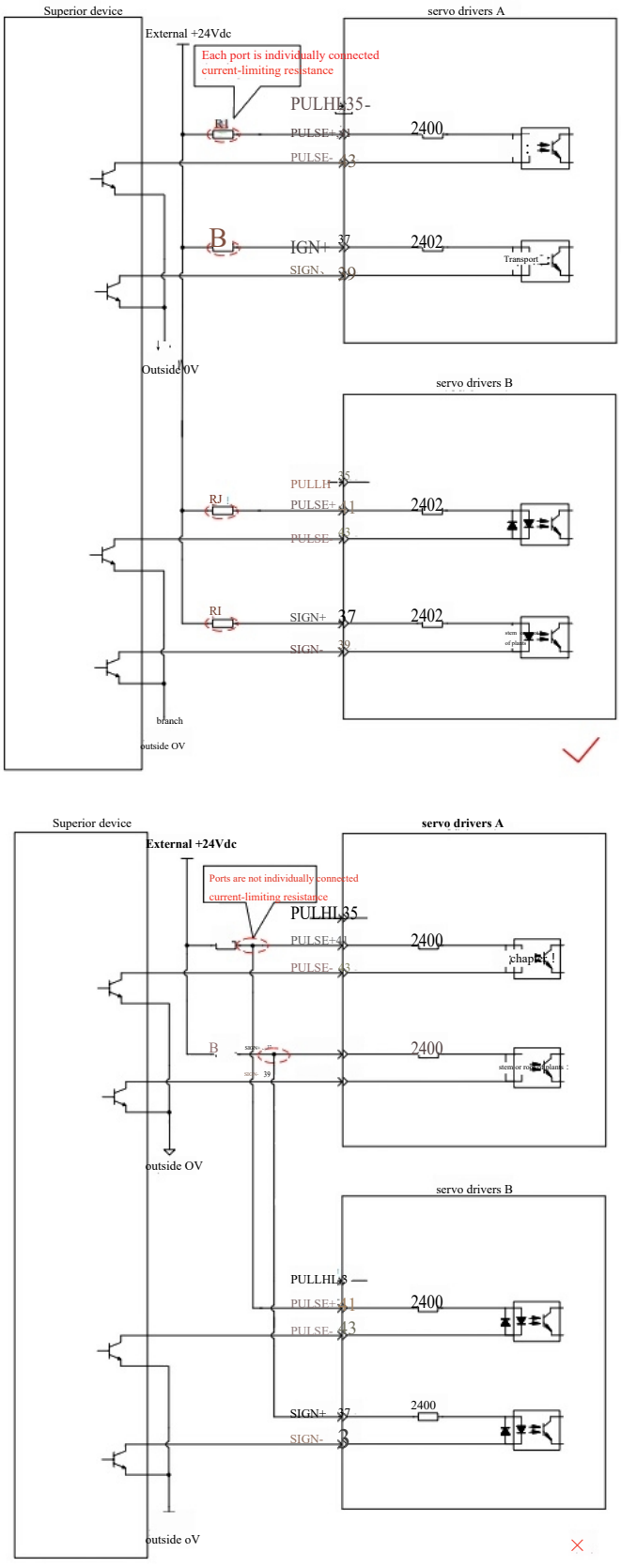

Figure 2-27 Low-Speed Pulse Instruction Input Wiring Diagram (wrong Connection 5)

(2) High speed pulse instruction input

The high-speed command pulse and symbol output circuit on the upper device side can only be output to the servo driver through the differential driver.

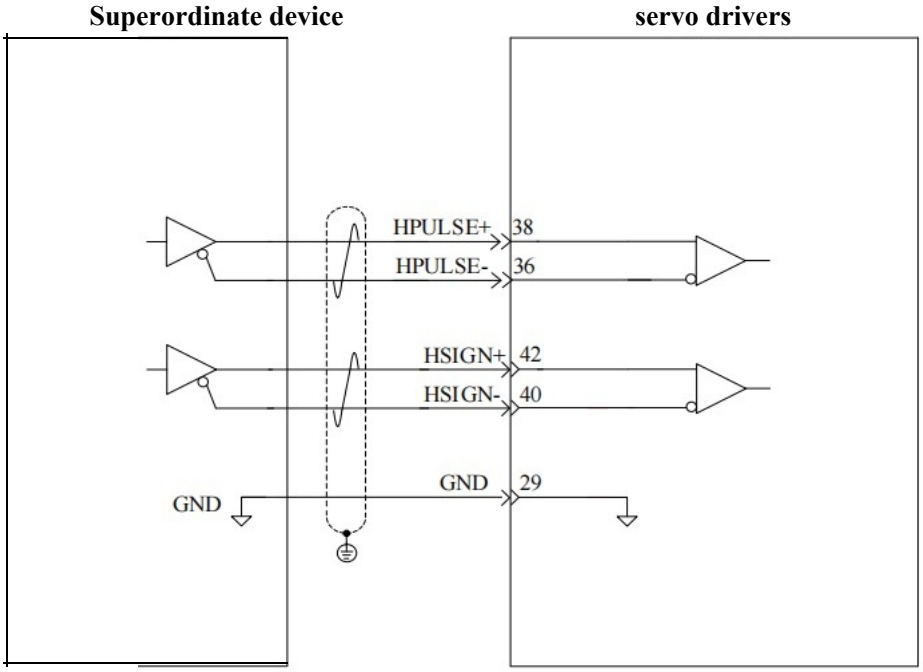

Figure 2-28 Schematic Diagram of High-Speed Pulse Instruction Input Wiring

pay attention to：

Be sure to ensure that the differential input is a 5V system, otherwise the servo driver's input pulses will be unstable. This can lead to the following:

When the input command pulse is generated, the pulse loss phenomenon occurs;

When the input instruction direction is reversed, the instruction is reversed;

Be sure to connect the 5V system ground of the upper device to the GND of the driver to reduce noise interference.

2.6.6 Description of Analog Input Wiring

The input ports of speed and torque analog signals are AI1 and AI2.

Voltage input range: -10V~ +10V;

Maximum allowable voltage: ±12 V;

Input impedance: approximately 9kΩ.

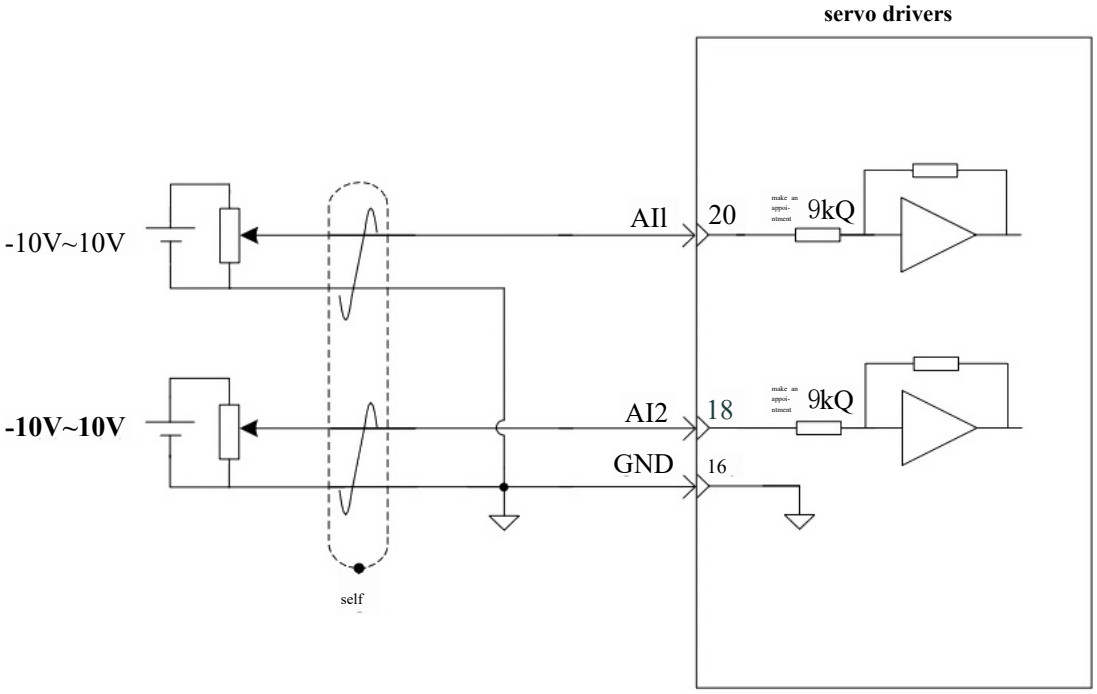

Figure 2-29 Schematic Diagram of Analog Input Wiring

2.7 Encoder Terminal Definition and Wiring Instructions

2.7.1 Motor Encoder

Table 2-6 Motor Encoder Interface Definition

Motor encoder connector (CN2)	Module name	Signal name	Pin number	mode of connection	function
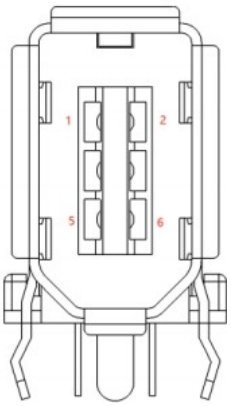 IEEE13946P	Motor encoder	5V	1	twisted-pair	Powering the encoder
		GND	2		
		-	3		-
		-	4		-
		SD+	5	twisted-pair	17bit-23bit Tama River encoder protocol encoder interface
		SD−	6		
		PE	hull	Connect cable shielding layer	shield

This port is used to drive the connector of the driver and motor encoder. During use, the cable should be 30cm away from the main circuit wiring;

The encoder uses a UL2464 standard 26AWG or higher specification twisted shielded cable;

The length of the encoder cable should take into account the voltage drop caused by line resistance and signal attenuation caused by distributed capacitance. The recommended cable length is less than 10m.

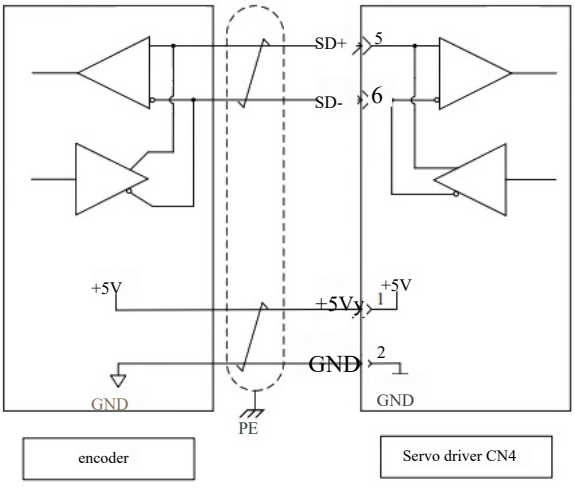

Figure 2-30 Motor Encoder Signal Input

2.8 Communication Terminal Definition

2.8.1 Background Debugging Terminals

Table 2-7 Backend Debugging Terminal Definition

Debug the connector in the background	Module name	Signal name	Pin number	function
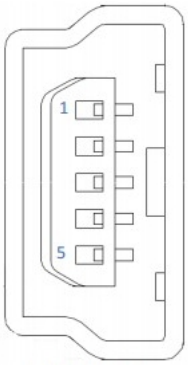 MINI USB	Backend debugging port	VBUS	1	USB communi-cation
		D-	2	
		D+	3	
		-	4	
		GND	5	
		PE	hull	

This port is used to drive the connection between the driver and the computer. Through the background debugging software, the driver can be tested and run, parameters adjusted, waveform collected and other operations.

2.9 Grounding and Anti-Interference Measures

2.9.1 Grounding Measures

Table 2-8 Grounding Precautions for Servo Controller

Install the driver on a metal enclosure (control cabinet)
Connect the servo motor's grounding terminal to the servo driver's grounding terminal PE, and reliably ground the PE terminal
The drive must be single point grounded
Grounding wiring should use thick wire (2.0mm² or more) as far as possible. For the connection wire of the outer box used for grounding, please use thick wire (3.5mm² or more) as far as possible. It is recommended to use braided copper wire
It is recommended to use more than 6 kinds of grounding (grounding resistance value is less than 100Ω)
Be sure to connect the grounding terminal of the drive to the ground wire (PE) of the control cabinet to avoid electric shock
There are two protective grounding terminals, so do not connect all the wires together when connecting the protective grounding terminal (PE)

2.9.2 Countermeasures

Due to the different peripheral wiring, grounding and anti-interference components used, the servo driver may have switching noise affecting the normal operation of the system. Therefore, it is necessary to adopt the correct grounding method and anti-interference measures. The following figure shows the anti-interference measures of the servo driver.

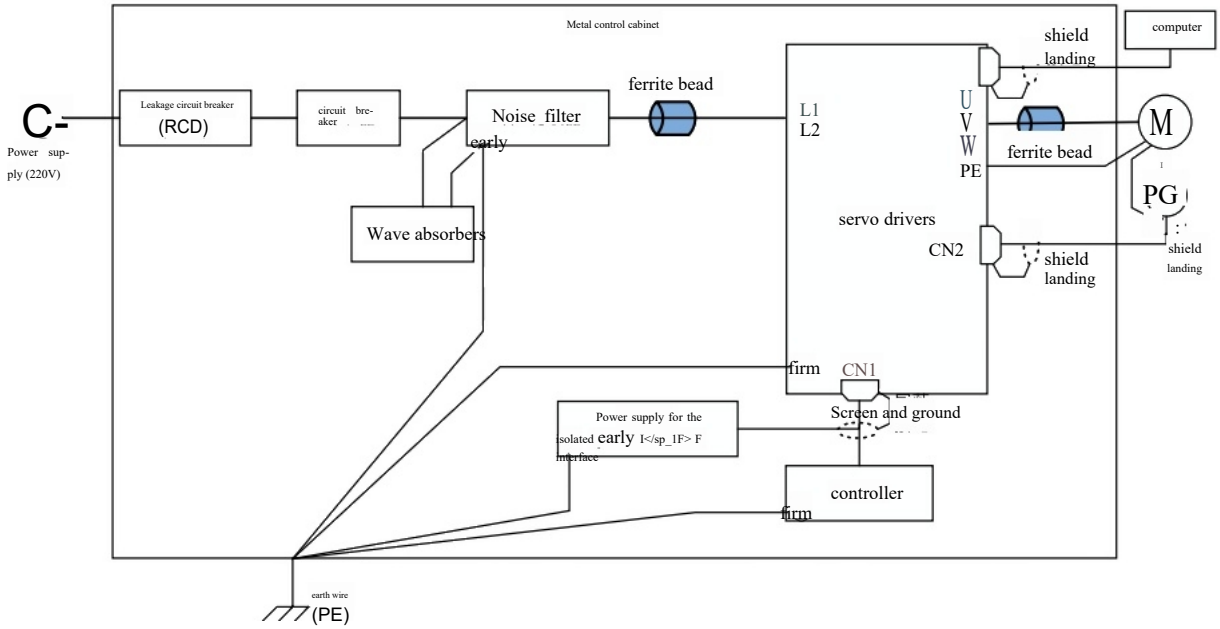

Figure 2-31 Schematic Diagram of Anti-Interference Measures for Servo Driver

The length of the instruction input cable should be less than 3m; the encoder cable should be less than 20m and use double shielded wire;

When wiring, please separate the strong wire from the weak wire and keep a distance of more than 30cm. Do not put them in the same pipe or tie them together;> ferrite magnetic rings should be installed for all cables, input/output lines and power lines used to connect the driver;

Install surge suppressors on the coils of relays, screw tubes and electromagnetic contactors;

Please install a noise filter on the input side of the power line, and do not share the power supply with welding machines, discharge processing equipment, etc.;

Connect the shield wire and ground wire (PE) of all cables;

Ground both ends of the shielded layer of the motor encoder cable.

2.9.3 Noise Filter

(1) Noise filter usage

To prevent interference from power lines and reduce the impact of the servo driver on other sensitive equipment, follow these guidelines when selecting, installing, and wiring the noise filter:

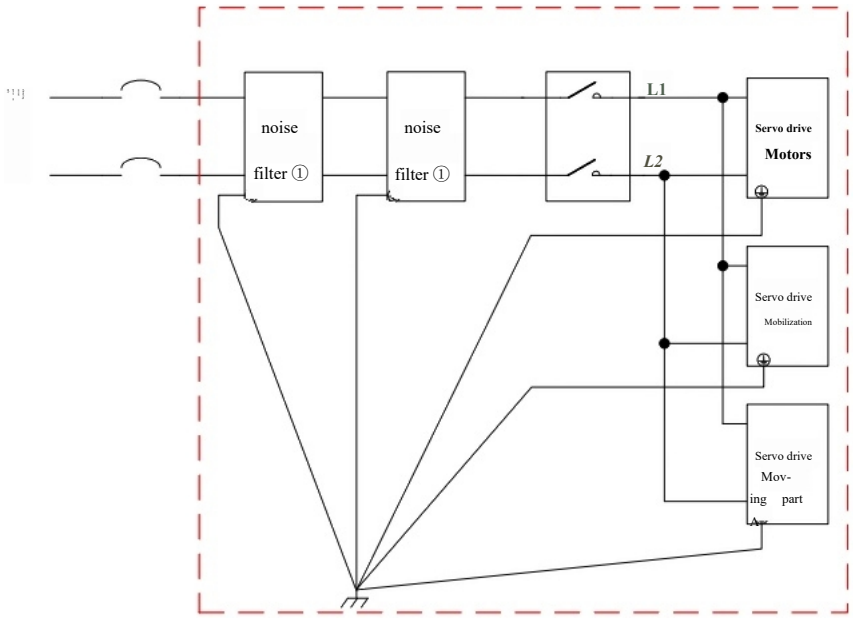

Figure 2-32 Schematic Diagram of Installation and Grounding of Noise Filter in Series

Please select the corresponding noise filter according to the input current size;

Please separate the input and output wiring of the noise filter, do not arrange them in the same pipeline or tie them together;

Separate the grounding wire of the noise filter from its output power line;

The noise filter should use single point grounding, and the grounding wire should be short and thick cable as far as possible;

When the noise filter and servo driver are installed in a control cabinet, it is recommended to fix the filter and servo driver on the same metal plate to ensure that the contact part is conductive and well overlapped, and the metal plate is grounded;

When installing the filter, the connection cable between the filter and the driver must be as short as possible, less than 30cm. At the same time, ensure that the filter and the driver are connected to the same grounding reference surface, and ensure that the filter is reliably grounded, otherwise the filtering effect of the filter cannot be achieved;

If multiple drives are used and a single noise filter is shared in the power supply section, consult the manufacturer of the noise filter. If the noise reaches the limit, it is better to use two in series (as shown above).

(2) Noise filter selection

It is recommended to use a standard EMC filter for the noise filter. It is recommended to use the product of the manufacturer Schaferner (SCHAFFNPR), which is shown in the following figure :



SCHAFFNPR FN3258 series filters SCHAFFNPR FN2090 series filters

Figure 2-33 Schaffner (SCHAFFNPR) EMC Filter Appearance

The servo driver model and the recommended EMC filter model are shown in the following table:

Table 2-9 Recommended Manufacturers and Models of EMC Input Filters

series	Driver model	Rated input current (A)	Filter model
		In	(SCHAFFNPR)
Single phase 220V power supply			
SIZE-A	HR3-PR0R8S2	1.2	FN2090-3-06
	HR3-PR1R6S2	2.3	FN2090-3-06
	HR3-PR2R8S2	4.0	FN2090-4-06
SIZE-B	HR3-PR5R5S2	7.9	FN2090-8-06
	HR3-PR7R6S2	9.6	FN2090-10-06
SIZE-C	HR3-PR012S2	12.8	FN2090-16-06
	HR3-PR014S2	16.0	FN2090-16-06
Three-phase 220V power supply			
SIZE-C	HR3-PR012S2	8.0	FN 3258-16-44
	HR3-PR014S2	10.2	FN 3258-16-44

Recommended EMC filter installation dimensions:

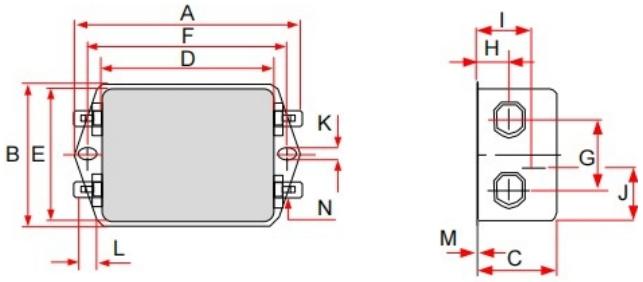

Figure 2-34 FN 2090 Series 1-20A Filter Size Diagram (unit: Mm)

Table 2-10 FN 2090 Series 1-20A Filter Size Table (mm)

specified curr-ent (A)	A	B	C	D	E	F	G	H	worker	J	K	L	M	N
1	71	46.6	22.3	50.5	44.5	61	21	10.8	16.8	25.25	5.3	6.3	0.7	6.3×0.8
3	85	54	30.3	64.8	49.8	75	27	12.3	20.8	19.9	5.3	6.3	0.7	6.3×0.8
4														
6														
8	113.5±1	57.5±1	45.4±1	94±1	56	103	25	12.4	32.4	15.5	4.4	6	0.9	6.3×0.8
10														
12														
16														

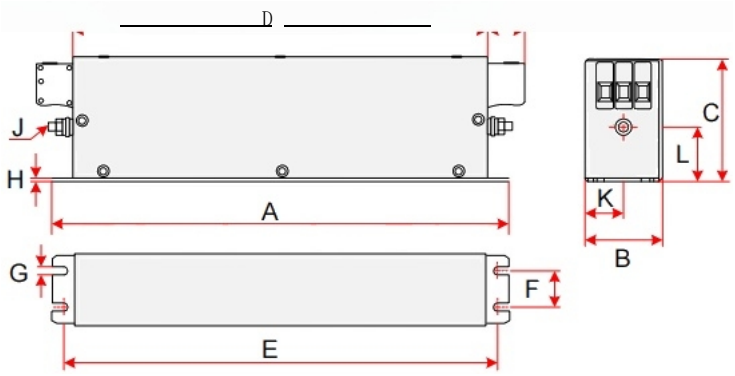

Figure 2-35 Filter Size Diagram of FN3258 Series 7-30A (unit: Mm)

Table 2-11 FN3258 Series 7-30A Filter Size Table

rated current (A)	A (mm)	B (mm)	C (mm)	D (mm)	E (mm)	F (mm)	G (mm)	H (mm)	I (mm)	J	K (mm)	L (mm)
7	190	40	70	160	180	20	4.5	1	22	M5	20	29.5
16	250	45	70	220	235	25	5.4	1	22	M5	22.5	29.5
30	270	50	85	240	255	30	5.4	1	25	M5	25	39.5

2.9.4 Earth Leakage Circuit Breaker

Servo drivers will generate high frequency leakage current during operation. The following matters should be paid attention to when installing the leakage protection configuration on the line:> The equipment can generate DC leakage current in the protective conductor, so type B (delayed) leakage protection circuit breaker must be used;

If multiple drives are to be installed, each drive should provide a leakage protection circuit breaker;

The capacity of the driver, carrier frequency, motor cable type and length, EMI filter will affect the size of the leakage current, need to set the protection threshold reasonably;

> It is recommended to use leakage protection circuit breakers of Zhengtai, Schneider and other brands;

When the leakage current generated by the driver causes the leakage protection circuit breaker to operate, the following measures can be taken:

Increase the rated operating current of the leakage protection circuit breaker;

Change the leakage protection circuit breaker to type B, delay type, with high frequency suppression function;

Reduce the carrier frequency;

Shorten the output drive cable length;

Install leakage current suppression equipment.

2.9.5 Cable and Wiring Requirements

(1) Power cable requirements

To meet CE Mark EMC requirements, motor power cables must use shielded cables with properly grounded shielding layers. These cables come in two configurations: three-phase conductors shielded cables and four-phase conductors shielded cables. If the shielding layer's conductivity fails to meet specifications, an additional PE (polyethylene) wire can be added. Alternatively, a four-phase conductor shielded cable may include one PE wire. To effectively suppress radio frequency interference emissions and conduction, the shielding layer consists of coaxial copper braiding tape. The braiding density of the shielding layer should exceed 90% to enhance both shielding effectiveness and conductivity.

Recommended power cable types are shown in the following figure —— Symmetric shielded cable:

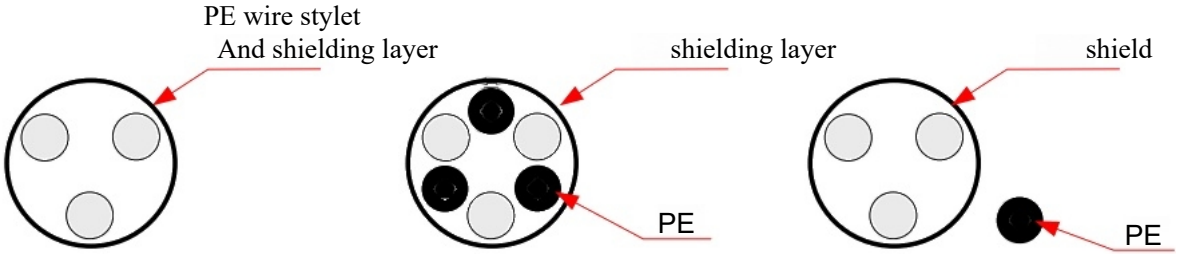

Figure 2-36 Recommended Power Cable Types

The shielding layer of the main circuit input/output side cable of the servo driver is connected to the PE terminal on the driver (please refer to the following figure for wiring).

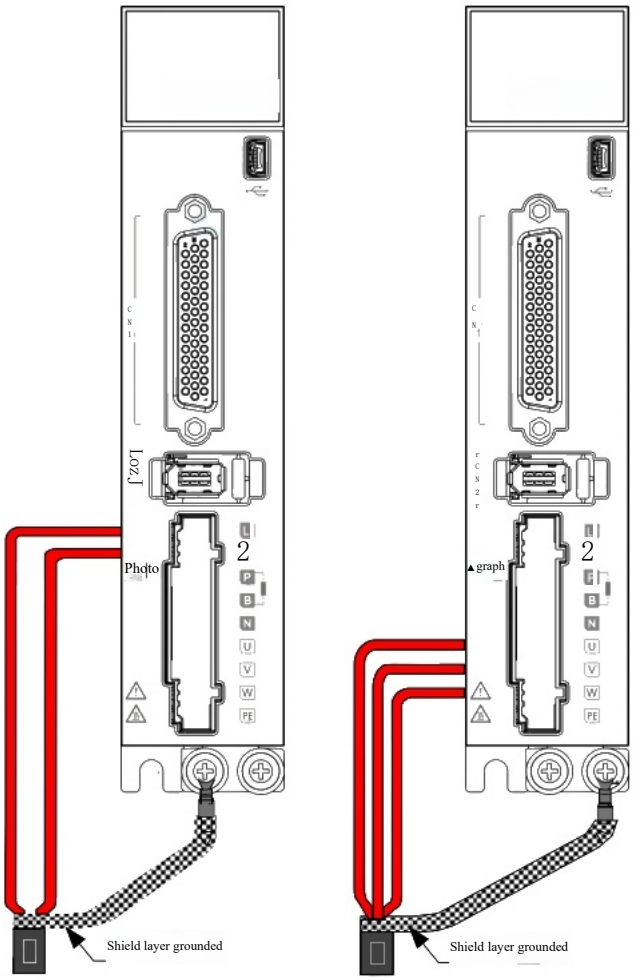

Figure 2-37 Input/output Side Power Cable Shielding Layer Wiring

The following matters should also be noted when selecting the output side cable of the servo driver:

Do not connect the capacitor or surge absorber, otherwise it will cause the servo driver to protect frequently or even damage;

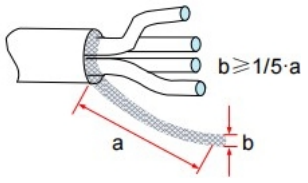

Figure 2-38 Schematic Diagram of Motor Cable Shielding

(2) Cable requirements for codeers

Encoder cables must be shielded twisted pair.

(3) USB cable requirements

For the connector on the driver side, please use a commercially available USB mini-B that meets the computer specifications;

Use a shielded USB cable;

When using cables without filtering measures, install signal ferrite magnetic rings at both ends of the cable.

(4) Cabling requirements

The following matters should be paid attention to when wiring the cable, and it is recommended to use the wiring form and layout spacing shown in Figure 2-39:

Motor cables must be routed away from other cables. Motor cables for several drives can be arranged side by side;

It is recommended to lay the motor cable, input power cable and control cable and encoder cable in different cable grooves respectively. In order to avoid electromagnetic interference caused by the rapid change of the driver output voltage, it is necessary to avoid long distance parallel wiring of motor cable and other cables;

When control cables must pass through power cables, ensure that the Angle between the two cables is as close to 90 degrees as possible. Do not pass other cables through the driver;

The power input and output lines of the driver and weak electrical lines (such as control lines) should not be arranged in parallel, and should be arranged vertically when conditions permit;

Good connections must be maintained between the cables and cable troughs, and good grounding must be provided. Aluminum cable troughs may be used to improve equipotential bonding.

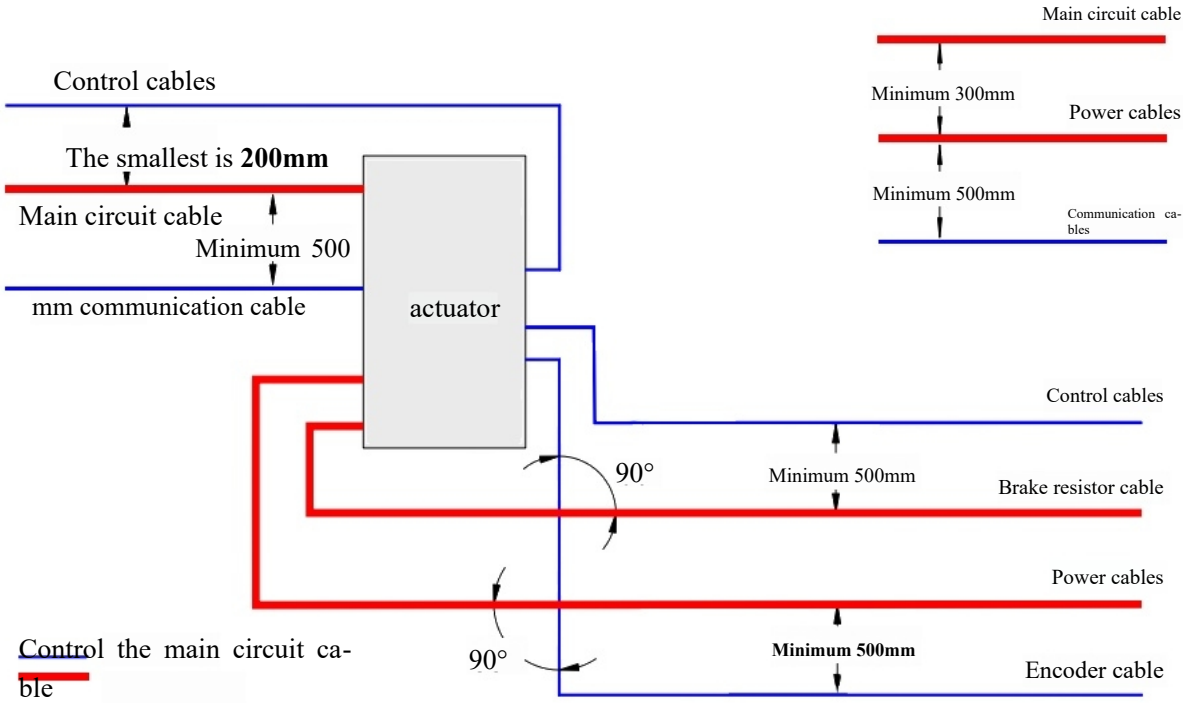

Figure 2-39 Recommended Cable Layout

2.9.6 Input and Output Magnetic Ring Selection

In order to reduce the interference with adjacent equipment, it is recommended to add a filter magnetic ring on the three-phase input/output power lines of the servo driver: the input cable is installed away from the servo driver;

The output cable is installed close to the servo driver.

The following table shows the recommended magnetic ring manufacturer model.

Table 2-12 Recommended Magnetic Ring Manufacturer Model

outside drawing	Magnet ring manufacturer model	Size (outer diameter × inner diameter × thickness) (mm)
	DY644020H	64×40×20
	DY805020H	80×50×20
	DY1207030H	120×70×30

2.9.7 Common EMC Problem Resolution Suggestions

Servo driver products belong to strong interference equipment, and interference may occur during use due to wiring, grounding, protection and other problems. When there is mutual interference with other equipment, the following methods can be used for rectification.

Table 2-13 Common EMC Problems and Solutions

Type of interference	Rectification measures
The leakage protection circuit breaker trips	Reduce the carrier frequency without affecting the performance; Reduce driver line length; The input drives the wire to add a magnetic ring (without PE wire); If the circuit trips instantly when power is applied, disconnect the large capacitance between the input end and the ground; (disconnect the grounding end of the external or built-in filter, and the grounding end of the Y capacitor between the input port and the ground); If the operation or enable trip is required, leakage current suppression measures (leakage current filter, safety capacitor + magnetic ring, magnetic ring) should be installed at the input end;
Driver operation causes interference	The motor housing is connected to the PE end of the driver; The PE end of the driver is connected to the grid PE; Add magnetic ring to input power line; Capacitor or magnetic ring is added to the disturbed signal port; Add an additional common ground connection between the devices;
communications jamming	The motor housing is connected to the PE end of the driver; The PE end of the driver is connected to the grid PE; Add magnetic ring to input power line; Add matching resistor at communication line source and load end; The communication line and the differential line are connected to the external communication common ground wire; The communication wire is a shielded wire, and the shielding layer is connected to the communication common ground; Multi-node communication wiring should use chrysanthemum chain mode, and the branch length is less than 30 cm;
I/O disturb	Low speed DI increases the capacitor filter, it is recommended to be up to 0. 1μF; AI increase the capacitance filter, it is recommended to be up to 0. 22μF;

2.10 Three Control Mode Wiring

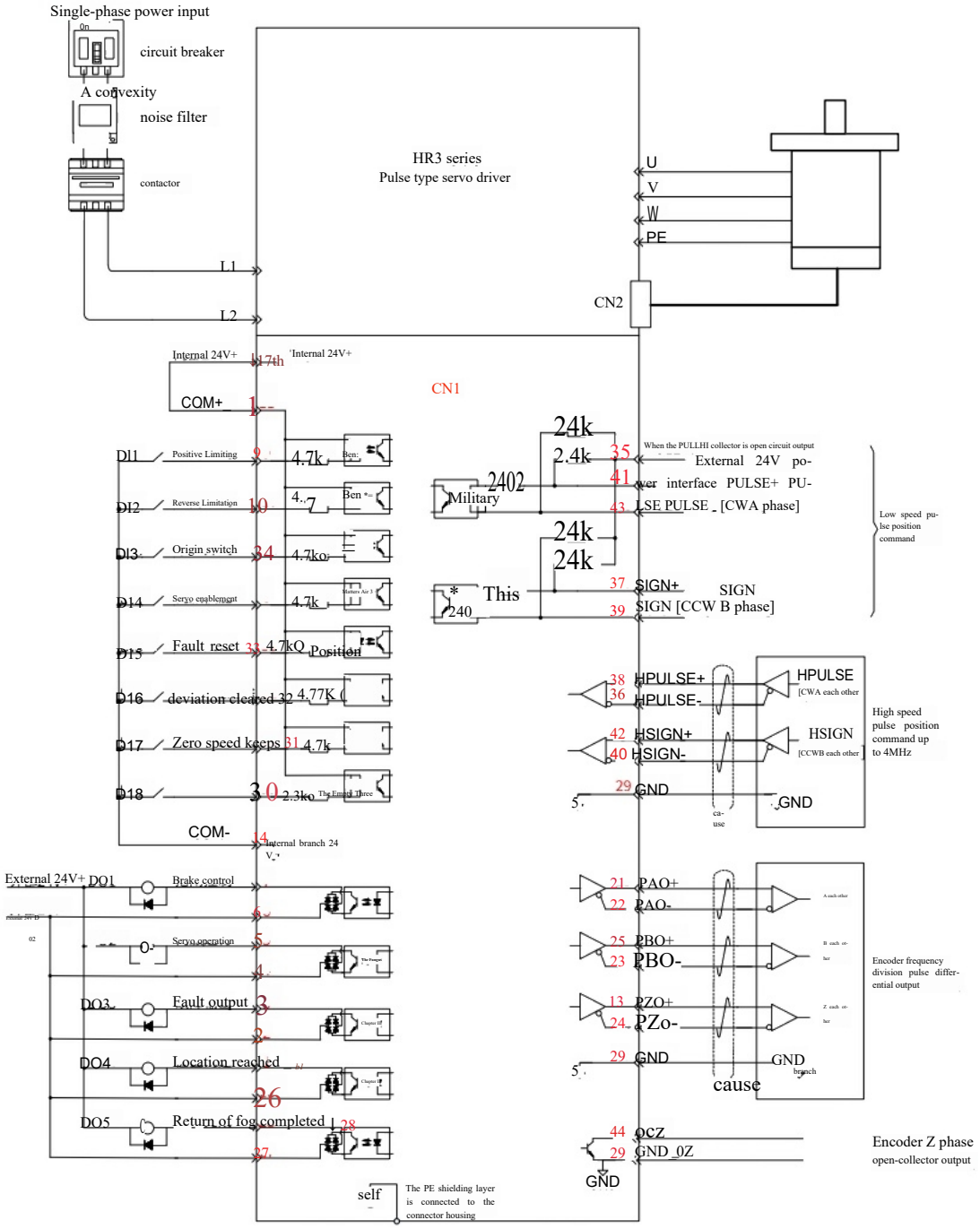

Figure 2-40 Location Mode Wiring Diagram

Internal 2 4V power range 20-28V, maximum working current 2 00 mA.

The DI input power supply needs to be external, and the power supply voltage range is 12-24VDC, and the maximum is not more than 30VDC.

High speed/low speed pulse port wiring should be selected with double twisted shield wire. The shield layer must be connected to PE at both ends, and GND should be reliably connected to the signal ground of the host computer.

The DO output power supply needs to be connected externally, and the power range is 5-24V. The maximum allowable voltage of DO port is DC30V, and the maximum allowable current is 50mA.

The encoder frequency division output cable should be selected as a twisted pair shielded wire, and the shielding layer must be connected to PE at both ends. GN D is reliably connected to the signal ground of the upper computer.

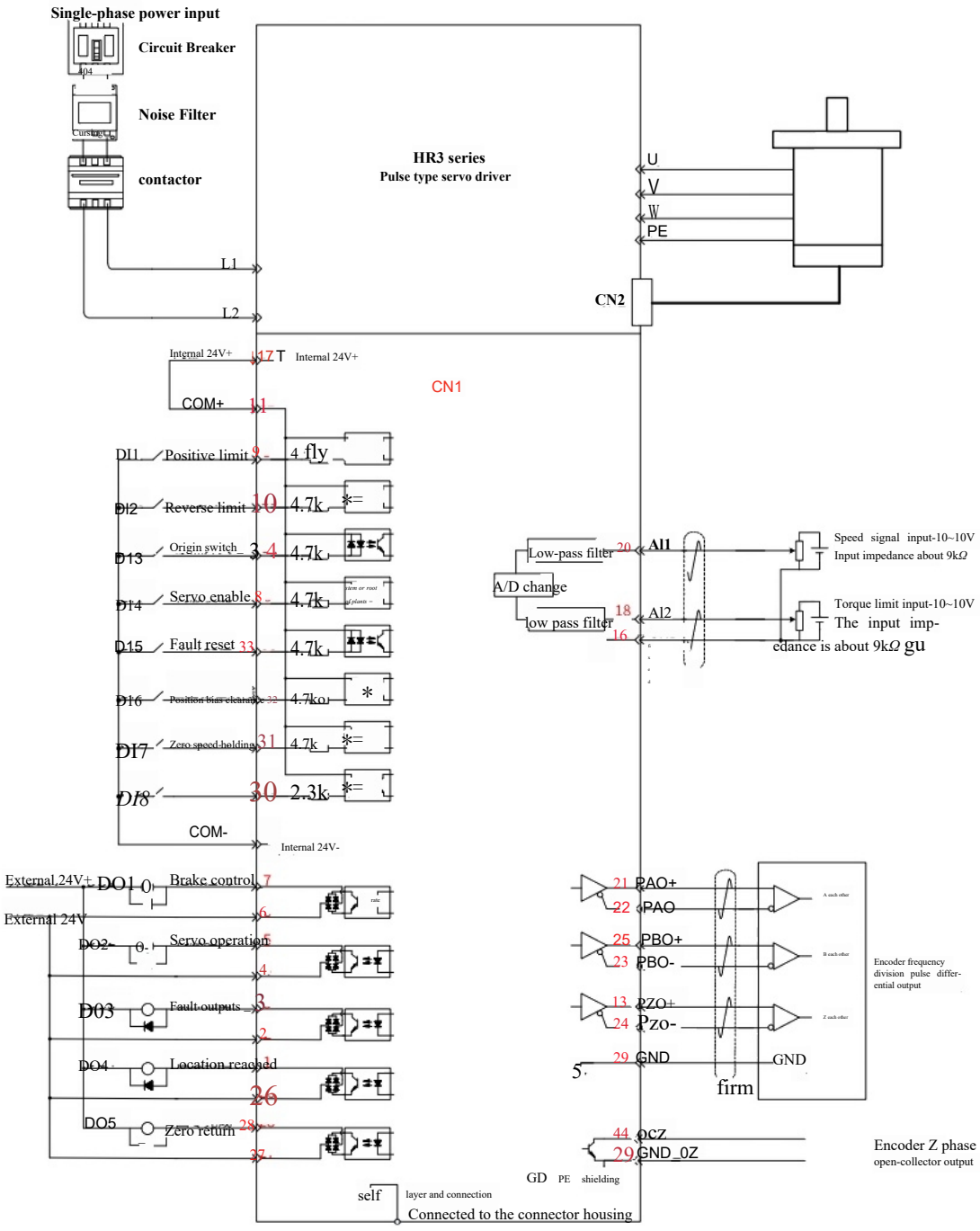

Figure 2-41 Speed Mode Wiring Diagram

AI circuit wiring should be selected with double shielded wire, and the shielding layer must be connected to PE at both ends.

Internal 2 4V power range 20-28V, maximum operating current 200mA.

The DI input power supply can be externally connected, and the power supply voltage range is 12-24VDC, with a maximum of 30VDC.

The DO output power supply can be connected externally, and the power range is 5-24V. The maximum allowable voltage of DO port is DC30V, and the maximum allowable current is 50mA.

The encoder frequency division output cable should be selected as a twisted pair shielded wire, and the shielding layer must be connected to PE at both ends. GN D is reliably connected to the signal ground of the upper computer.

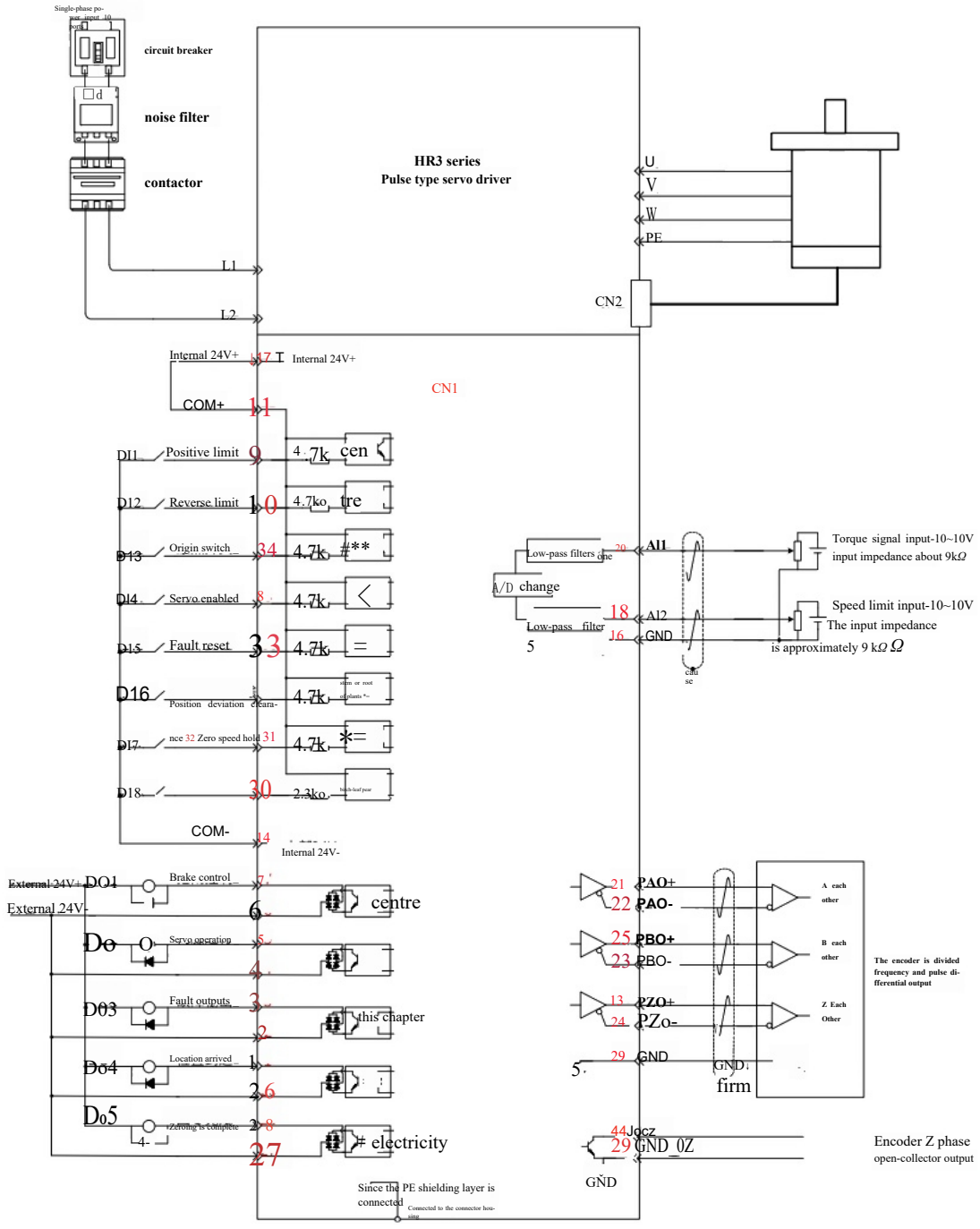

Figure 2-42 Torque Mode Wiring Diagram

AI circuit wiring should be selected with double shielded wire, and the shielding layer must be connected to PE at both ends.

Internal 24V power range 20-28V, maximum operating current 200mA.

The DI input power supply can be externally connected, and the power supply voltage range is 12-24VDC, not exceeding 30VDC at most. The DO output power supply can be externally connected, operating within a voltage range of 5 to 24V. The DO port has a maximum allowable voltage of DC30V and **maximum allowable current of 50mA**. For the encoder frequency converter output cables, double-stranded屏蔽 wire should be selected. The shielding layer must be grounded at both ends, and the signal ground of the upper computer can be reliably connected through the GN D terminal.

Chapter 3 Debugging

3.1 Basic Operation Setting

3.1.1 Electrical Adjustments

Before the servo system runs, the motor parameters should be input and the magnetic pole identification operation should be performed.

This section describes the panel operation process. For details of background operation, see Chapter 3.3 DriveStart Usage.

(1) Motor parameter input

The setting mode of motor parameters is shutdown setting, and the effective mode is re-powering. The list of motor parameters is as follows:

Table 3-1 Motor Parameter List

name	FC	unit	initial value	least value	crest value
rated voltage	P00.10	V	0-220V	0-220V	655.35
rated current	P00.11	A	4.70	0	655.35
power rating	P00.12	kW	0.75	0	655.35
nominal torque	P00.13	Nm	2.39	0	42949672.95
maximum torque	P00.15	Nm	7.16	0	42949672.95
rated speed	P00.17	rpm	3000	0	65535
maximum speed	P00.18	rpm	6000	0	65535
Motor inertia Jm	P00.19	Kg·cm^2	1.30	0	42949672.95
number of pole-pairs	P00.21	-	4	0	65535
phase resistance	P00.22	Ω	0.500	0	65.535
inductance Lq	P00.23	mH	3.27	0	655.35
inductance Ld	P00.24	mH	3.87	0	655.35
Counter electromotive force	P00.25	mV/rpm	33.30	0	655.35
D-axis back electromotive force compensation	P00.31	%	60.0	0.0	6553.5
Q-axis back potential compensation	P00.32	%	100.0	0.0	6553.5
Current sampling rate	P00.33	-	0-Extraction rate 32	0-Extraction rate 32	3-Extraction rate 256
D-axis proportional gain 1	P00.34	Hz	2000	0	65535
D-axis integration gain 1	P00.35	%	2.00	0.00	655.35
Q-axis proportional gain 1	P00.36	Hz	2000	0	65535
Q-axis integral gain 1	P00.37	%	1.00	0.00	655.35
D-axis proportional gain 2	P00.38	Hz	1000	0	65535
D-axis integration gain 2	P00.39	%	2.00	0.00	655.35
Q-axis proportional gain 2	P00.40	Hz	1000	0	65535
Q-axis integral gain 2	P00.41	%	1.00	0.00	655.35

Please check the motor model and parameters used, and input the motor parameters according to the following process.

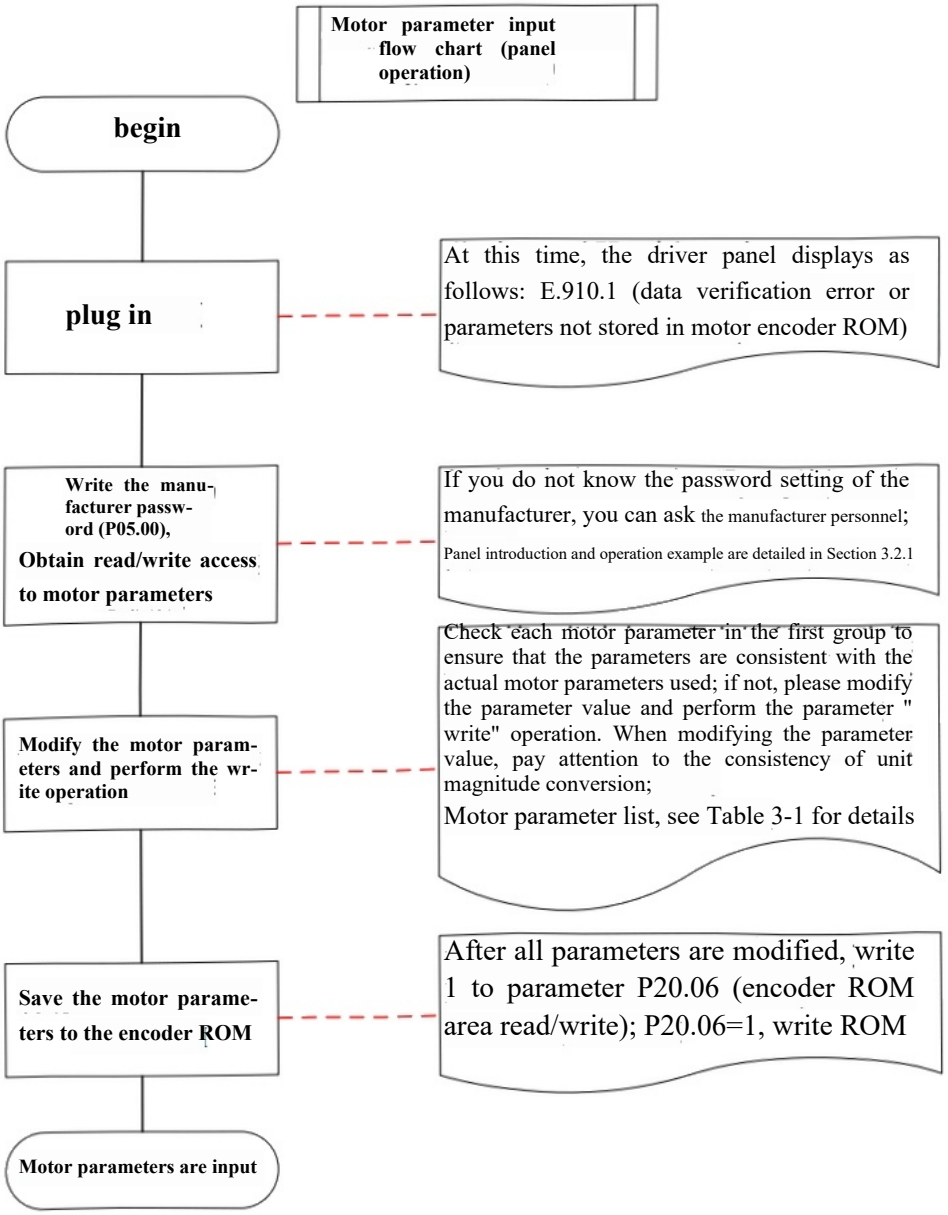

Figure 3-1 Operation Process of Motor Parameter Input Panel

(2) Polarization identification

The operation process of magnetic pole identification is as follows.

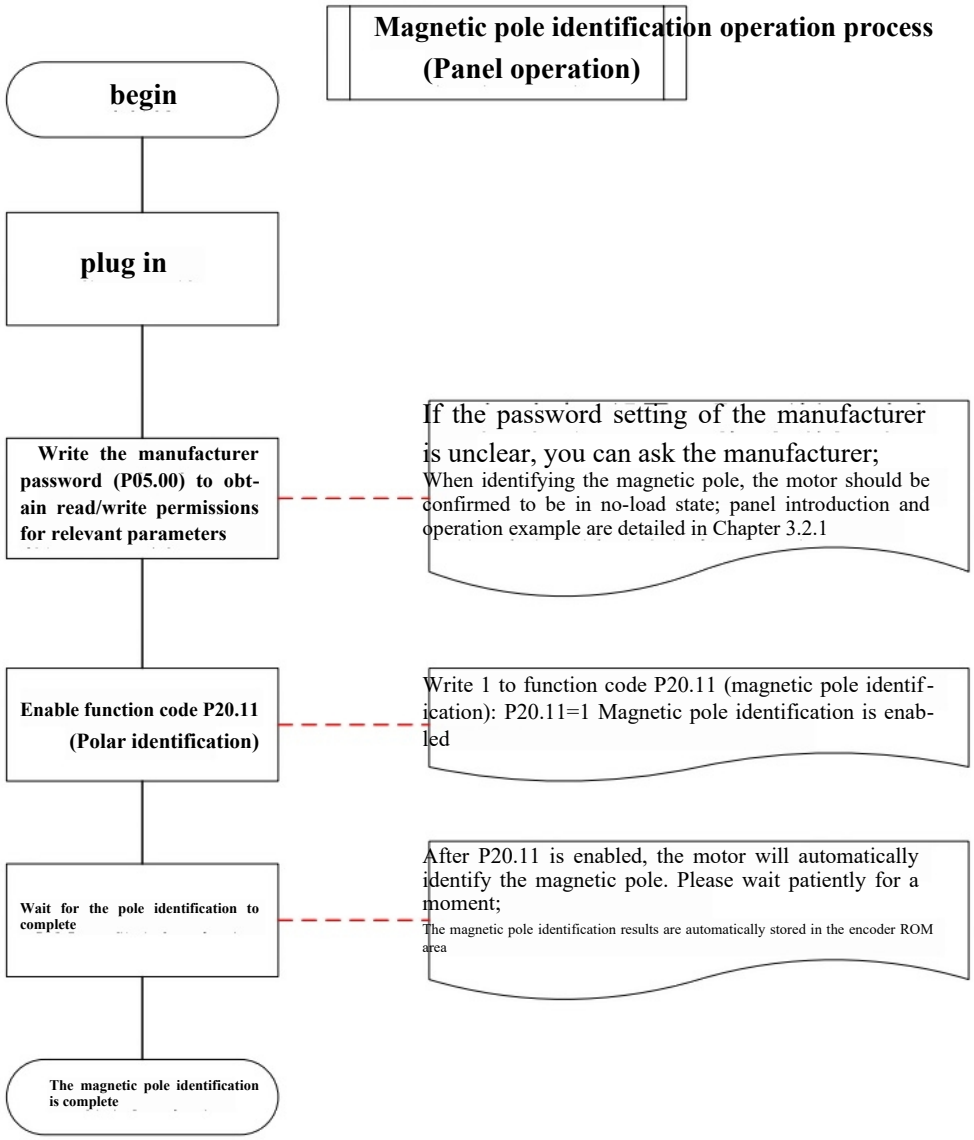

Figure 3-2 Magnetic Pole Identification Operation Process

3.1.2 Brake Application

The brake is used to stop the unintended movement of the moving load (such as falling under the action of gravity) when the servo system is not activated (e.g., the servo system is powered off), so as to prevent the servo motor from moving accidentally due to its own weight or external force after power failure.

pay attention to：

> The brake mechanism is a fixed special mechanism of non-passing electric operation, which can not be used for braking purposes, and can only be used when the servo motor is kept in a stopped state;> The brake coil has no polarity;

After the servo motor stops, the servo enable should be turned off;

When the motor with built-in brake is running, the brake may make a creaking sound, but the function is not affected;

When the brake coil is energized (the brake is open), magnetic flux leakage may occur at the end of the shaft. Please pay attention to the possibility of this situation when using magnetic sensors and other instruments near the motor.

(1) Brake parameter setting

For applications with the brake, the brake enable switch (P05.12) must be set to enable, one of the DO terminals in the servo driver is configured for function 17 (BK, brake control), and the valid logic corresponding to the DO terminal is determined.

According to the current state of the servo driver, the working timing of the brake mechanism can be divided into two types: brake timing when the servo driver is in normal state, and brake timing when the servo driver is in normal state.

Brake timing of motor fault status.

Table 3-2 P05.12 Brake Enable Switch Function Codes

P05.12-Brake enable switch	
accessibility	Read/writable
unit	
Windows default	1
least value	0
crest value	1
Setting, effective manner	Run Settings / Go Now

Table 3-3 Output Function Number of Gate Break

code	name	function name	function
17	BK	**Brake control**	**Invalid, the brake power supply is connected, the brake action is in place, the motor is locked; valid, the brake power supply is disconnected, the brake is released, the motor can move;**

(2) Normal state of servo driver brake timing

The normal state of brake timing can be divided into two situations: motor stationary

and motor moving. Stationary: the actual speed of the motor is less than 30rpm;

Movement: the actual speed of the motor reaches 30rpm and above;

Brake Timing of Servo Motor When Stationary

> When the servo enable is turned from ON to OFF, if the current motor speed is lower than 30rpm, the driver acts according to the static brake timing;

> After the brake output is set from OFF to ON, do not input position/speed/torque commands within P05.13 time, otherwise it will cause command loss or operation error;

When used with a vertical shaft, the self-weight or external forces of the mechanical moving parts may cause slight mechanical movement. When the servo motor is stationary, the servo enable is turned off, and the brake output immediately becomes OFF. However, during the P05.14 time period, the motor remains powered to prevent the mechanical moving parts from moving due to self-weight or external forces.

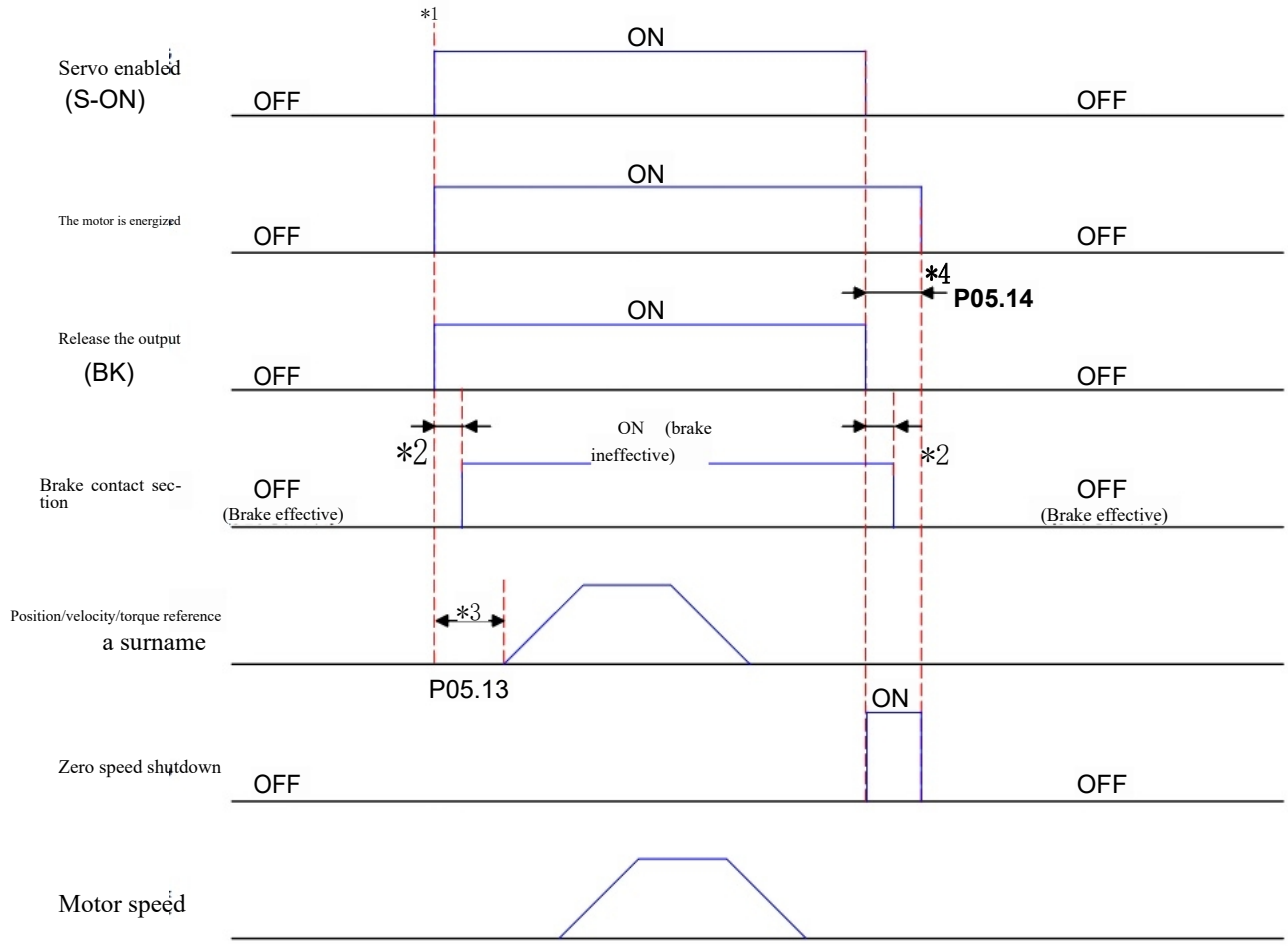

Figure 3-3 Motor Brake Timing Diagram When Stationary

*1. When the servo enable is ON, the brake output is set to ON, and the motor enters the power-on state;

* 2. The delay time of the brake contact part should be referred to the relevant specifications;

*3. From setting the brake output to ON to input the command, please wait for more than P05.13 time;

*4. When the servo motor is stationary (the motor speed is lower than 30rpm) and the servo is enabled OFF, the brake output is also set to OFF at the same time. P05.14 can be used to set the delay period after the motor enters the non-powered state when the brake output is OFF.

Table 3-4 P05.13 Brake Release to Receive Command Delay (stop State) Function Code

P05.13-Brake release to receive command delay	
accessibility	Read/writable
unit	ms
Windows default	250
least value	0
crest value	500
Setting, effective manner	Run Settings / Go Now

Table 3-5 P05.14 Retraction of Brake Zero Speed Holding Time (stop State) Function Code

P05.14-Brake suction zero speed holding time	
accessibility	Read/writable
unit	ms
Windows default	150
least value	1
crest value	1000
Setting, effective manner	Run Settings / Go Now

Brake timing of servo motor during motion

When the servo is turned from ON to OFF, if the current motor speed is greater than or equal to 30rpm, the driver acts according to the motion brake timing.

When the servo is enabled from OFF to ON, do not input position/velocity/torque command during P05.13 time, otherwise it will cause instruction loss or operation error;

When the servo motor is moving, the servo enable is OFF, and the servo motor enters the zero speed stop state, but the brake output must meet any one of the following conditions to be set OFF;

I.P05.16 The time has not arrived, but the motor has slowed down to P05.15;

II. P05.16 Time has come, but the motor speed is still higher than P05.15.

After the brake output changes from ON to OFF, the motor is still in the on state for 50ms to prevent the mechanical moving part from moving due to self-weight or external force.

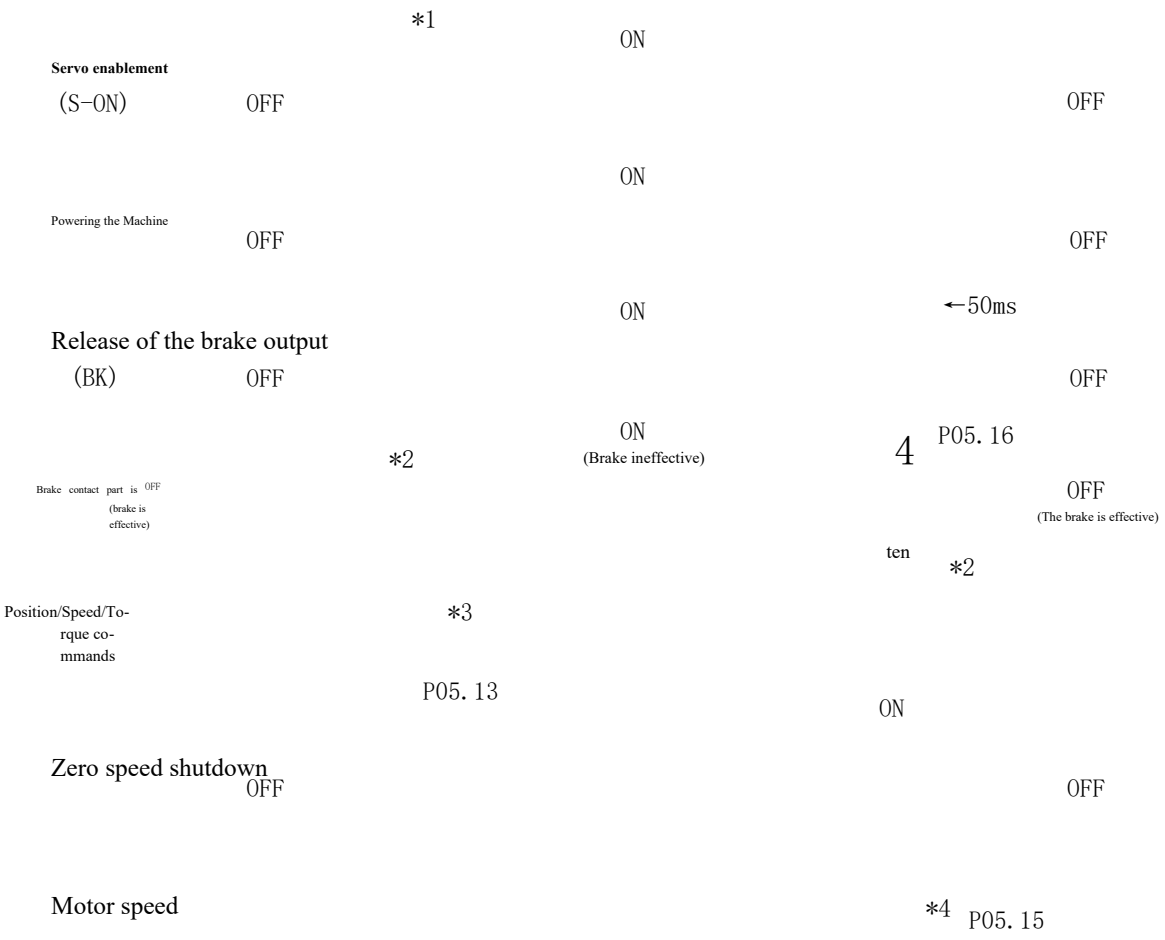

Figure 3-4 Motor Movement Brake Timing Diagram

*1. When the servo enable is ON, the brake output is set to ON and the motor enters the power-on state.

*2. Please refer to the relevant specifications for the delay time of the brake contact part action.

*3. From setting the brake output to ON to input the command, please wait for more than P05.13 time.

*4. When the servo motor is moving, when the servo enable is OFF, P05.15 and P05.16 can be used to set the delay after the servo enable is OFF and the brake output is OFF. After the brake output is OFF, the motor will enter the non-powered state after a delay of 50 ms.

Table 3-6 P05.15 Brake Pickup Speed Threshold

P05.15-Brake pickup speed threshold	
accessibility	Read/writable
unit	ms
Windows default	30
least value	0
crest value	3000
Setting, effective manner	Run Settings / Go Now

Table 3-7 P05.16 Brake Hold Time Threshold Function Code

P05.16-Brake suction time threshold	
accessibility	Read/writable
unit	ms
Windows default	500(ms)
least value	1
crest value	1000
Setting, effective manner	Run Settings / Go Now

(3) Servo driver fault state brake timing

Servo faults are classified as Category 1 (NO.1) and Category 2 (NO.2) according to the different shutdown modes. Please refer to "Chapter 6 Fault and Warning Handling". Servo driver fault status brake timing can be divided into the following two situations:

Category 1 fault occurs

The output condition of brake DO is the same as that of "brake timing when the servo motor moves under normal state of the servo driver". That is, brake output should be set OFF if any of the following conditions are met:

I.P05.16 The time has not arrived, but the motor has slowed down to P05.15;

I.P05.16 Time has come, but the motor speed is still higher than P05.15.

Category 2 fault occurs

When a type 2 fault occurs and the brake is enabled, the shutdown mode of type 2 fault is forced to "zero speed shutdown and free running state".

At this time, the servo motor first stops at zero speed. When the actual speed of the motor is lower than 30rpm, the output condition of the brake DO is the same as that of "the brake timing of the servo motor when it is stationary under normal conditions of the servo driver", that is: the output of the brake immediately turns OFF, but the motor is still in the on state during P05.14 time.

3.1.3 Operation Direction Selection

By setting the direction of operation, you can change the direction of the motor without changing the polarity of the input command. After modification, it is necessary to

The servo can be re-powered to take effect.

When the "run direction selection" is changed, the form of the pulse output by the servo driver and the positive/negative monitoring parameters will not change.

The "forward drive" in the over-travel prevention function is consistent with the setting of "running direction selection (P04.01)".

The running direction can be set by setting "P04 .0 1" on the panel or "P04 group-motor running direction selection" in the background software.

Table 3-8 P04.01 Motor Running Direction Selection

P04.01-Motor running direction selection	
accessibility	Read/writable
unit	1
Windows default	0
least value	0
crest value	1
Setting, effective manner	Shut down setting/repower
explanatory note	Set the motor to run in the positive direction when viewed from the motor shaft side.

3.1.4 Absolute Value Function

(1) Instructions for use of the absolute value system

An absolute encoder simultaneously records both the single-turn position and rotation count of a servo motor, with a single-turn resolution of 1048576. It can store 16-bit rotation count data up to 65,535. When the servo driver loses power, the absolute encoder automatically saves position information. Upon re-energization, it recalculates the mechanical absolute position without requiring a reset to the origin. In contrast, when using incremental encoders in servo drivers, the position feedback resets to 0 after power-up. The system must then perform origin reset operations to locate the actual zero position in the mechanical feedback. With absolute encoders, however, the system can accurately calculate the correct position feedback based on the saved encoder data during power restoration.

pay attention to：

HR3 series servo drivers support absolute position linear mode and absolute position rotation mode, suitable for position, speed, torque mode;

When the battery is connected for the first time, the E.917 encoder battery fault will occur. It is necessary to set the P20.05=1 reset encoder fault and then perform the origin reset operation;

If the running direction selection of P04.01 is modified, the origin needs to be reset;

In absolute position mode, the servo automatically detects whether the motor number is an absolute value encoder motor. If so, the error occurs E.019 (encoder mismatch fault).

(2) Objects related to the absolute value system

Function selection object:

Table 3-9 P04.02 Selection of Position Feedback System

P04.02-Select the position feedback system		
accessibility	Read/writable	
unit	–	
Windows default	0	
least value	0	
crest value	2	
Setting, effective manner	Shut down setting/repower	
explanatory note	Setting the absolute value system	
	set value	Absolute value system selection
	0	Incremental model
	1	An absolute linear pattern
	2	Absolute rotation mode

Table 3-10 P20.05 Encoder Reset

P20.05-Encoder reset		
accessibility	Read/writable	
unit	–	
Windows default	0	
least value	0	
crest value	2	
Setting, effective manner	Shut down setting/repower	
explanatory note	Encoder reset	
	set value	description
	0	attonity
	1	Repair failures
	2	Recovery faults and multi-loop data

Table 3-11 Encoder Feedback Parameter Objects

parameter	name	unit	scope
P09.42	Number of turns in encoder	shut in a pen	0-65535
P09.43	Encoder single coil position	Encoder unit	0-(2^31-1)
P09.45	The absolute position of the encoder is 32 bits lower	Encoder unit	(-2^31)-(2^31-1)
P09.47	The absolute position of the encoder is 32 bits high	Encoder unit	(-2^31)-(2^31-1)

pay attention to：

P09.43 is the single circle position of the encoder, whose range is 0~ encoder resolution. If it is a 23-bit encoder, the range is 0- (2^23-1);

P09.42 and P09.43 are encoder feedback data;

Since P09.42 is an unsigned number, the calculation method of absolute position of absolute encoder is as follows:

Absolute position of encoder = P09.42 × encoder resolution + P09.43 (P09.42 <32768)

Or

Absolute position of encoder = (P09.42-65536) × encoder resolution + P09.43 (P09.42 ≥ 32768)

> P09.45 and P09.47 are used to display the absolute position of the encoder. The calculation formula is as follows: absolute value encoder absolute position = P09.47×232+P09.45.

(3) Precautions for the use of absolute values

> When the battery is initially connected, E.917 (encoder battery failure) will occur. Set P20.05=1 to reset encoder failure before operating the absolute position system;

When the battery voltage of the test is less than 3.0V, the E. 921 (encoder battery warning) will occur. Please replace the battery. When replacing the battery, ensure that the servo driver is powered on but not running;

If the servo driver is powered off, the battery falls off or the battery is replaced, please use P20.05=1 to reset the encoder fault and then reset to the original point;

When the servo driver is down, the maximum speed of the motor should not exceed 6000rpm, otherwise, the encoder position information may be recorded incorrectly;

Please ensure that the battery charge and storage conditions do not damage the battery.

3.1.5 Electronic Gear Ratio Setting

(1) The concept of an electronic gear ratio

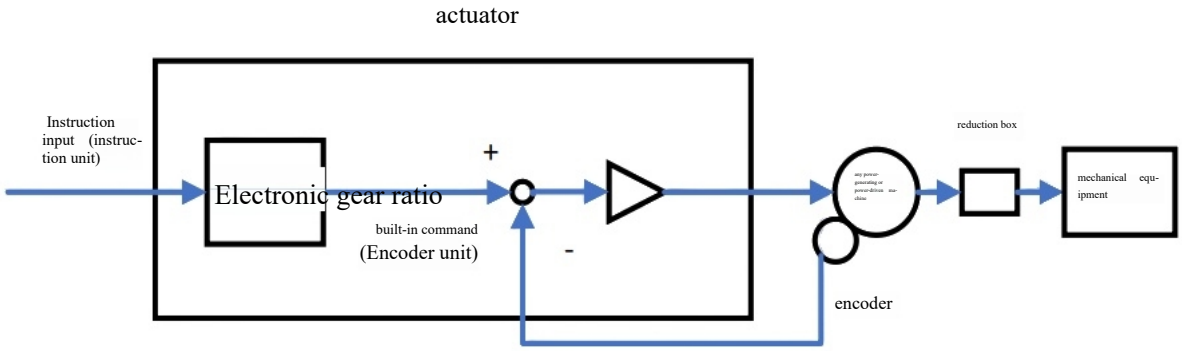

Figure 3-5 Electronic Gear Ratio

Electronic gear ratio: Electronic gear ratio is an analog gear, which is used to convert the control instruction (instruction unit) into the actual displacement of the motor (encoder unit). It can be expressed by the following formula:

$$编码器单位 = 指令单位 * \frac{电子齿轮比分子}{电子齿轮比分母}$$

The electronic gear ratio is set within the range of: $\frac{0.001 \times 编码器分辨率}{10000}$ <B/A< $\frac{4000 \times 编码器分辨率}{10000}$ Otherwise, a fault E.421 (electronic gear ratio setting error) will occur.

An incorrect setting of the electronic gear will cause incorrect operation. In this case, it is recommended to reset the gear when the servo driver is stopped.

(2) Steps to Set the Electronic Gear Ratio

Electronic gear ratios vary depending on the mechanical structure. Please follow these steps to set them:

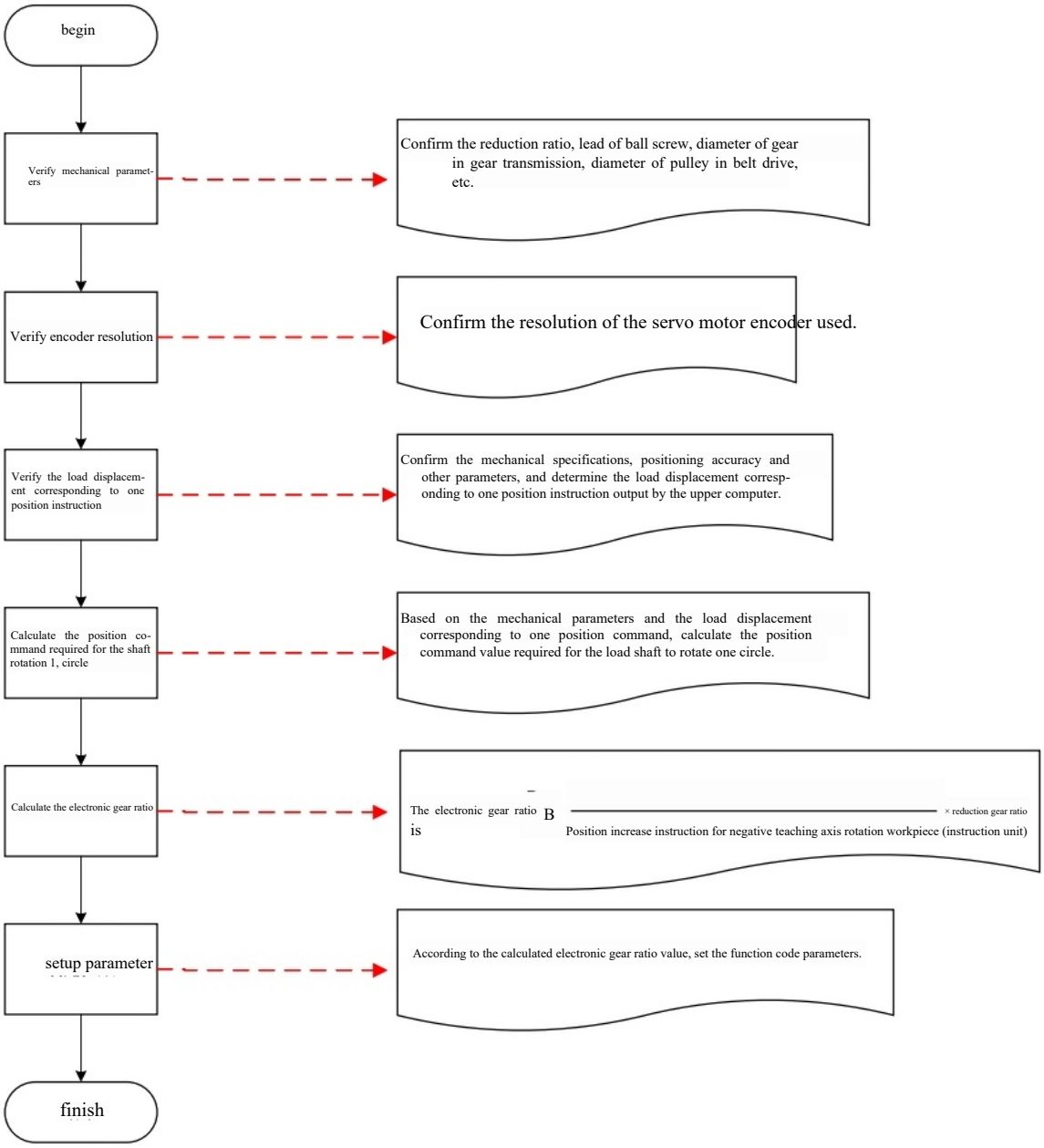

Figure 3-6 Setting Steps of Gear Ratio

In this paper, the parameter setting operation steps are as follows:

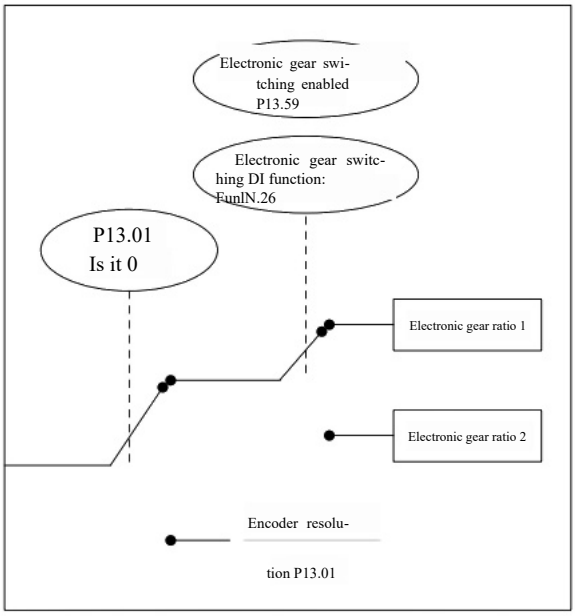

Figure 3 - 7 Electronic Gear Ratio Setting Operation Flow

When P13.01 is not 0, Electronic gear ratio $\frac{B}{A} = \frac{\text{编码器分辨率}}{P13.01}$ At this time, the electronic gear ratio 1 and the electronic gear ratio 2 have no effect.

(3) Related Function Code

a) Electronic Gear Ratio Value Setting

FC		name	Scope of the setting	unit	function	Methodology	entry-into-force time	Factory Settings
P13	01	The number of command pulses per revolution of the motor	0~1048576	P/r	Set the number of position instructions for the motor to rotate one circle	with immediate effect	Re-electrification	0
P13	03	Electronic gears are molecules	1~1073741824	-	Set the numerator of the first set of electronic gear ratios	Operating Settings	with immediate effect	4
P13	05	Electronic gears are molecules	1~1073741824	-	Set the denominator of the first set of electronic gear ratios	Operating Settings	with immediate effect	1
P22	05	The second set of electronic gear ratio molecules	1~1073741824	-	Set the numerator of the second electronic gear ratio	Operating Settings	with immediate effect	4
P22	07	The second set of electronic gears is the denominator	1~1073741824	-	Set the denominator of the second set of electronic gear ratio	Operating Settings	with immediate effect	1

b) Electronic Gear Ratio Switching Setting

When P13.01 is set to 0, the electronic gear ratio switching function becomes operational. The system determines whether gear ratio 1 to 2 switching is required based on actual mechanical conditions, with specific switching criteria predefined. At any given moment, only one electronic gear ratio configuration remains active. If the electronic gear ratio parameters are modified in real-time, their effectiveness duration is also subject to the switching criteria.

When the electronic gear ratio changes greatly in real time, or when the switching of two groups of electronic gear ratio differs greatly, the motor speed will fluctuate greatly! In this case, FIR filter of position instruction (P07.00) can be used to smooth the switching of position instruction.

FC		name	Scope of the setting	function	Methodology	entry-into-force time	Factory Settings
P13	59	Electronic gear switching enabled	0-position command equals 0 switch 1-real-time switch	Set the gear ratio switching condition	Shut down Settings	with immediate effect	0

At the same time, configure one DI terminal of the servo driver to function 26 (FunIN. 26: electronic gear switch) and determine the valid logic of the DI terminal.

code	function name	function
FunIN. 26	Gear change	Invalid, in position control mode, select the first set of electronic gear ratio; Effective, in the position control mode, the second set of electronic gear ratio is selected;

The final electronic gear ratio selected for the servo driver should be referred to the following table.

Table 3-12 Electronic Gear Ratio

P13. 01	P13. 59	FunIN. 26 corresponding DI terminal leve	Electronic gear ratio
0	0	of no av-ail	P13. 03 P13. 05
		valid	P22. 05 P22. 07
	1	of no av-ail	P13. 03 P13. 05
		valid	P22. 05 P22. 07

3.1.6 Sequence Chart

(1) Power on timing diagram

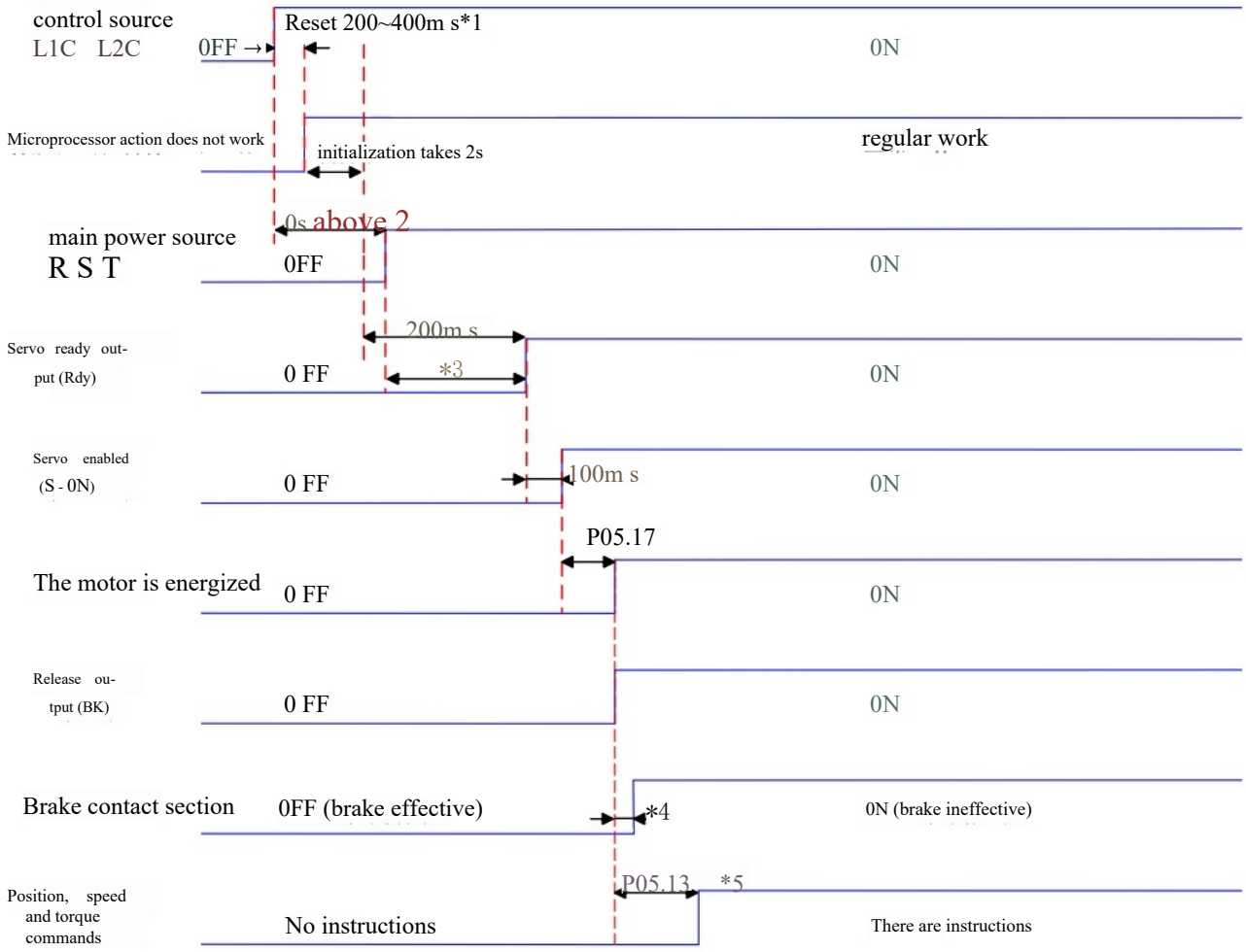

Figure 3-8 Power on Timing Diagram

***1: Reset time is determined by the establishment time of the microprocessor +5V power supply.**

*** 2: The above refers to the time determined by the actual operation moment of the main power supply.**

***3: When the control power supply and the main power supply are powered on at the same time, this time is the same as the time from the completion of microprocessor initialization to the validity of Rdy.**

*** 4: The delay time of the brake contact part action should be referred to the relevant specifications.**

***5: When the brake enable switch (P05.12) is not opened, P05.13 is inactive.**

(2) Stop timing diagram when warning or fault occurs

A) Fault 1: Free Stop, Keep Free Running State;

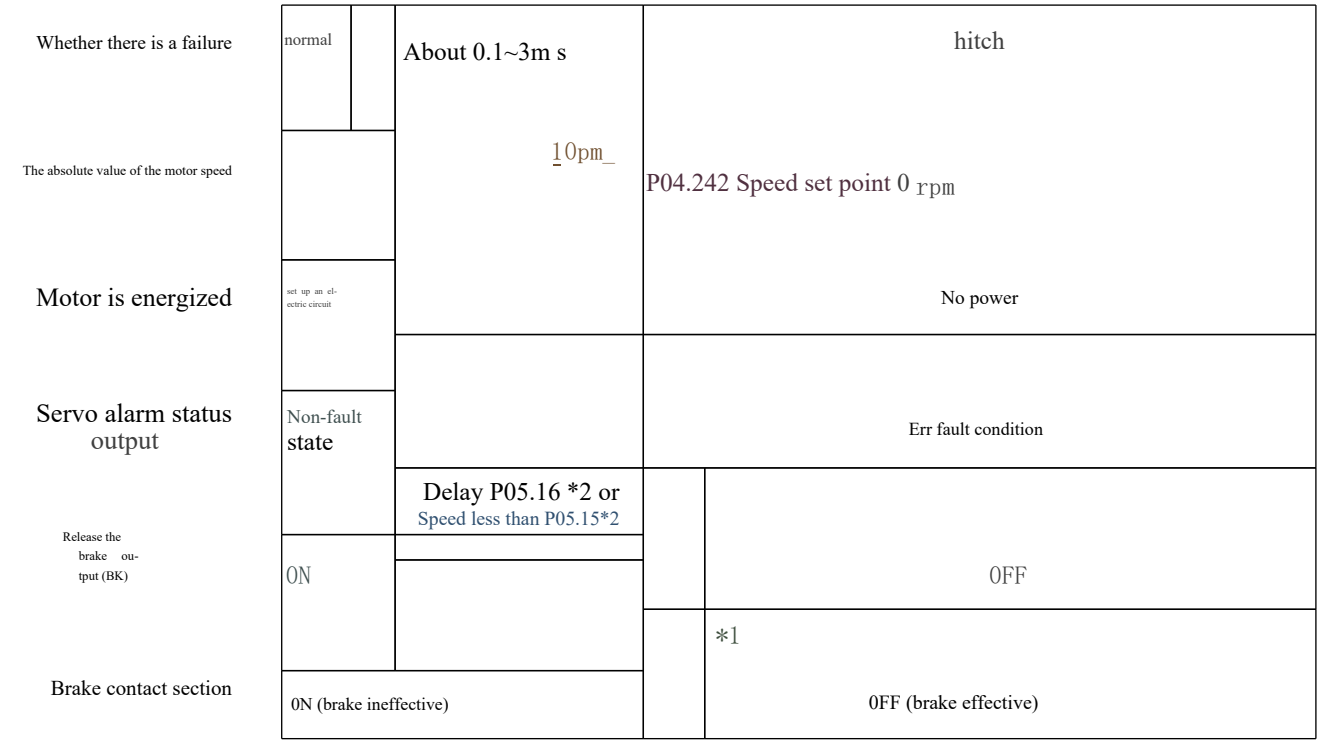

Figure 3-9 Schematic Diagram of Free Shutdown and Free Operation When Fault 1 Occurs

***1: The delay time of the brake contact part action is shown in the relevant specifications.**

***2: When the brake enable switch is not turned on (P05.12), P05.15 and P05.16 are not active.**

B) Fault 2 Non-Buckling: Free Stop, Keep Free Running State

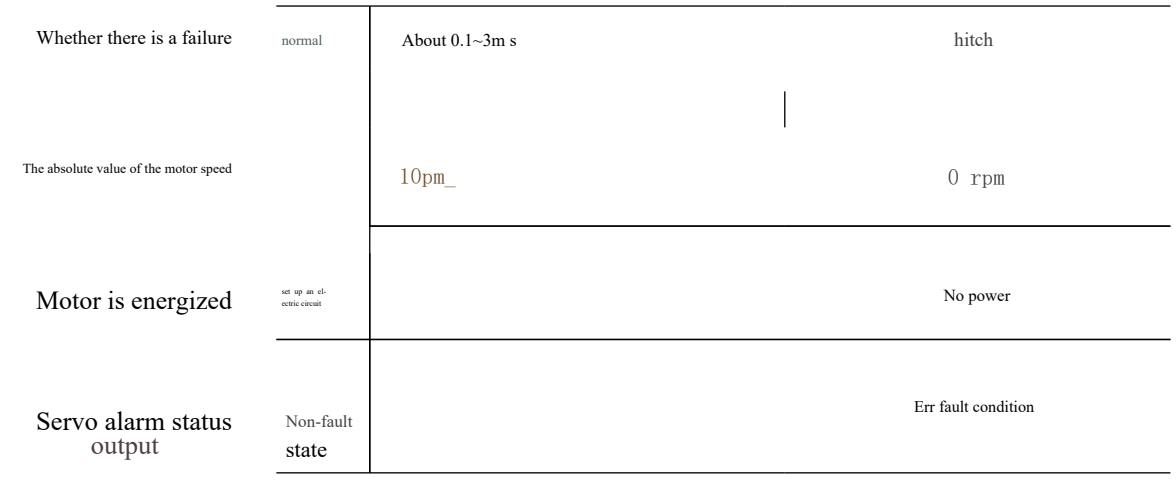

Figure 3-10 Schematic Diagram of Free Shutdown and Free Running State When Fault 2 Occurs

C) **Fault 2 No Brake: DB Shutdown, Keep DB Status**

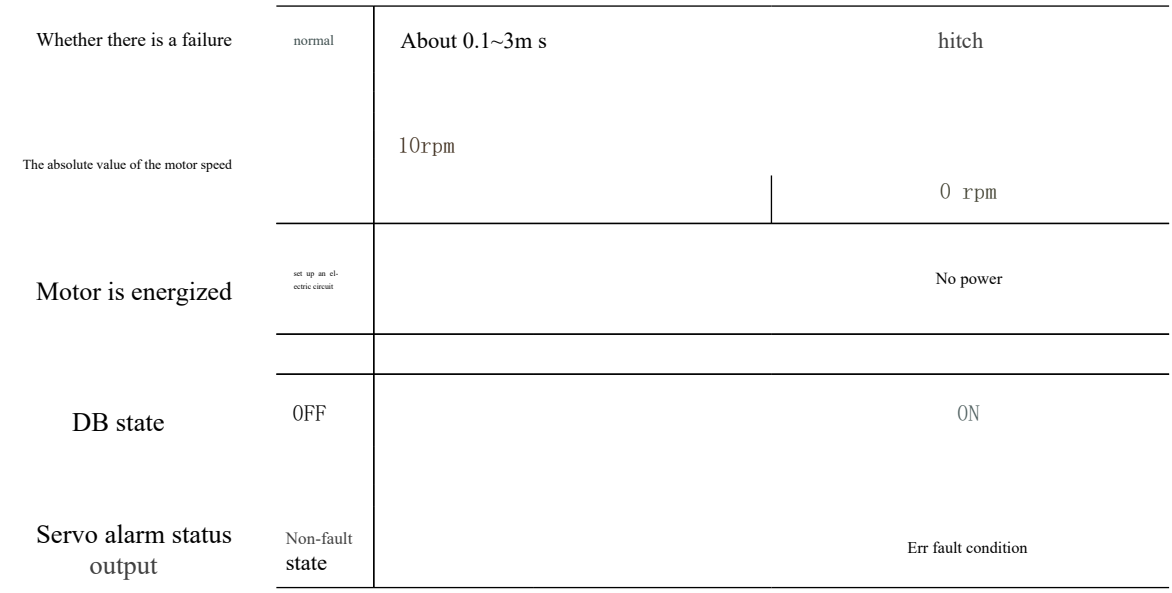

Figure 3-11 DB Shutdown at Fault 2 and DB State Timing Diagram

D) **Fault 2 Non-Brake: Stop at Zero Speed and Keep Free Running State**

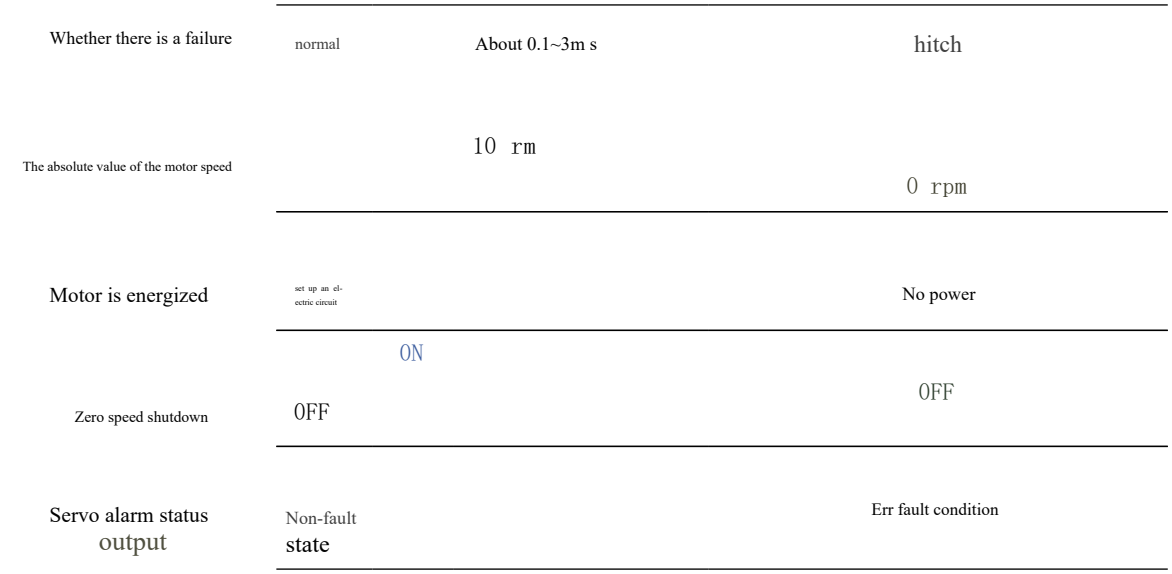

Figure 3-12 Schematic Diagram of Zero Speed Stop and Free Running When Fault 2 (non-Buckling) Occurs

E) Fault 2 With Brake: Forced to Stop at Zero Speed and Keep Free Running State

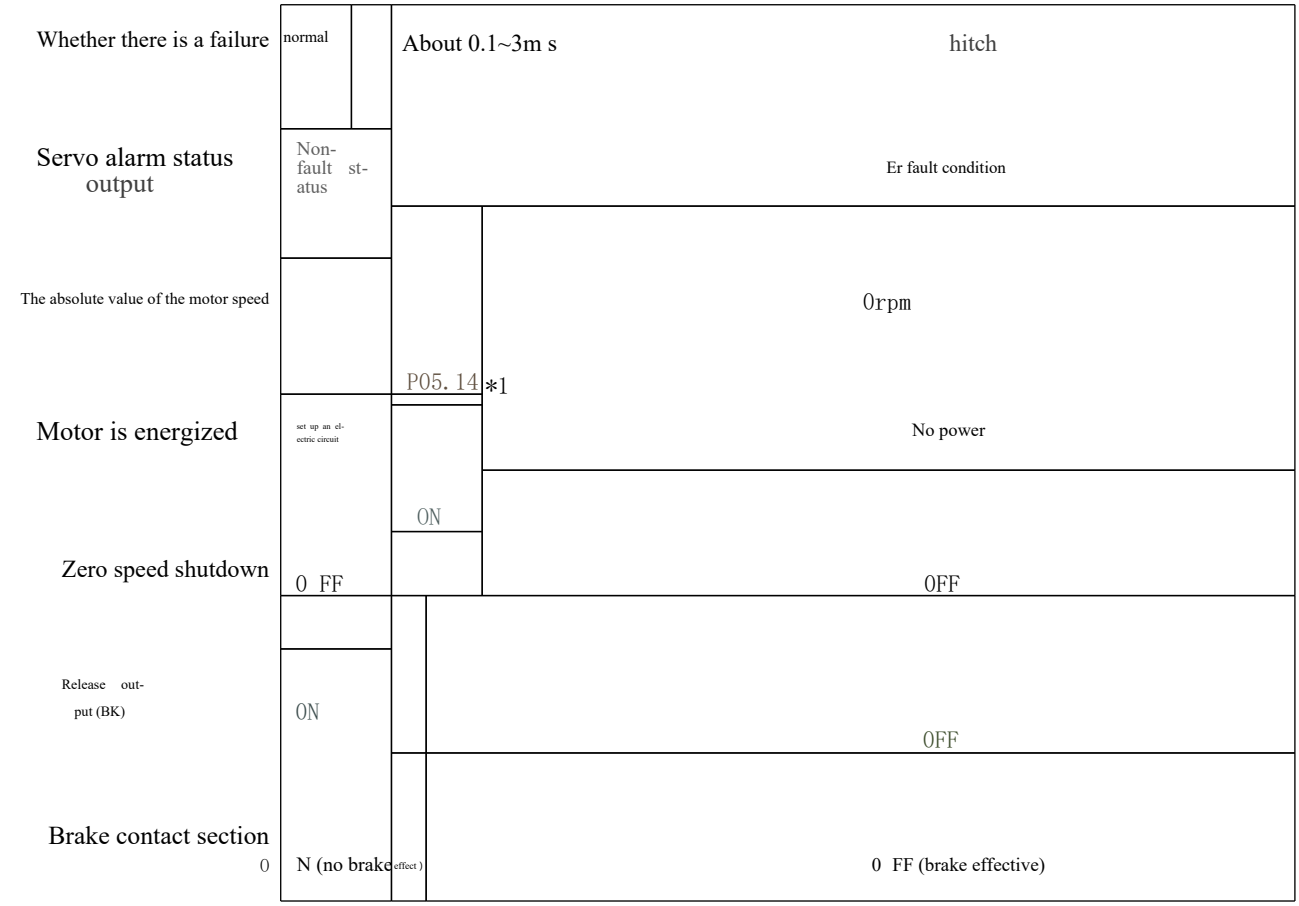

Figure 3-13 Zero Speed Shutdown Mode of Fault 2 (with Brake) Free Shutdown State Timing Diagram

*1: P05.14 has no effect when the brake enable switch (P05.12) is not opened;

*2: The delay time of the brake contact part action is shown in the relevant specifications.

Servo generates a Class 3 warning: A.220 (forward overrun warning) and A.221 (reverse overrun warning) will interrupt the current running state of the servo, which

The shutdown timing is shown in F).

F) Over-Run Shutdown Warning: Zero Speed Shutdown, Keep Position Locked

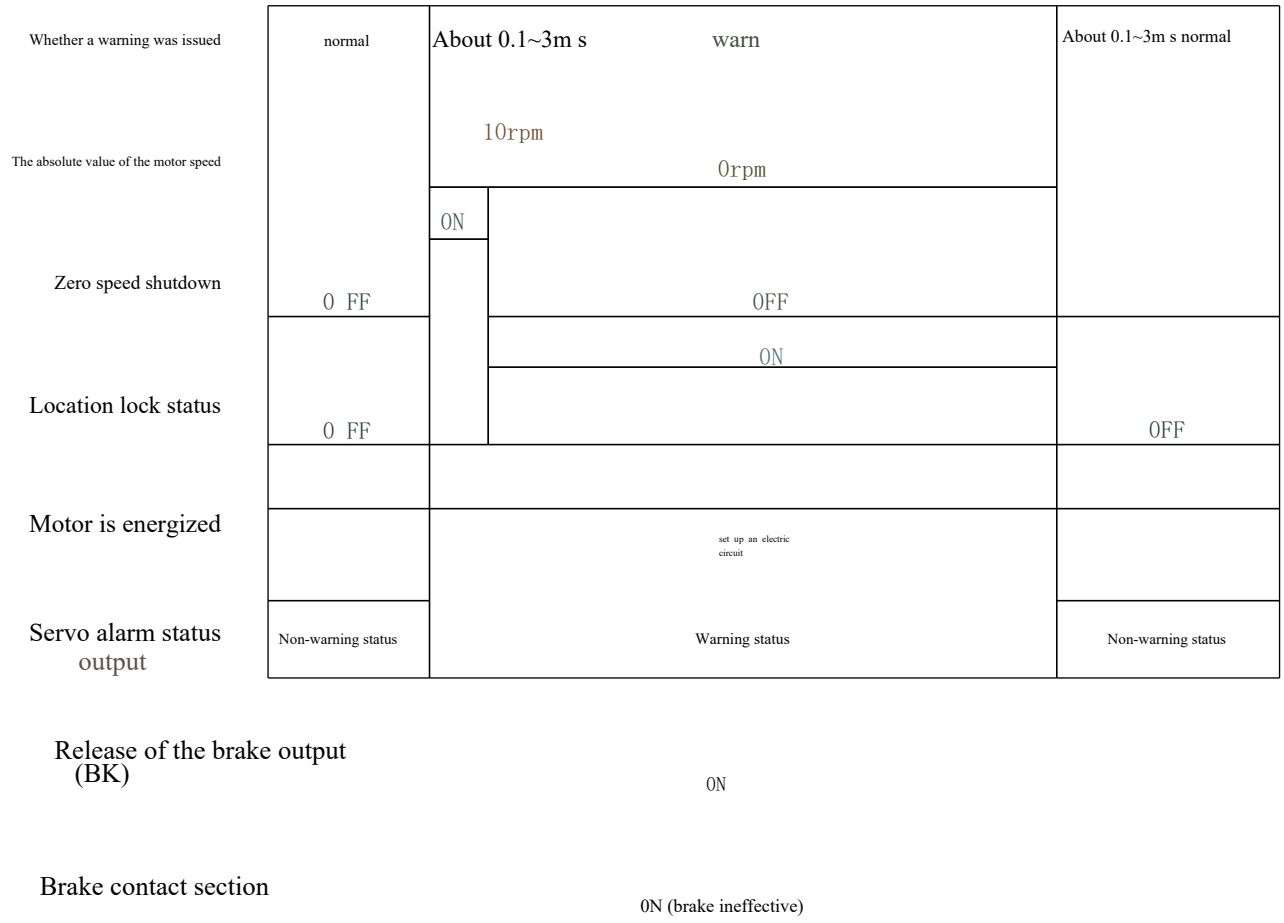

Figure 3-14 Is the Timing Diagram of Shutdown Warning

Except for the above two types of category 3 warnings, other warnings have no effect on the current state of the servo, as shown in G).

G) **Non-Stop Warning:**

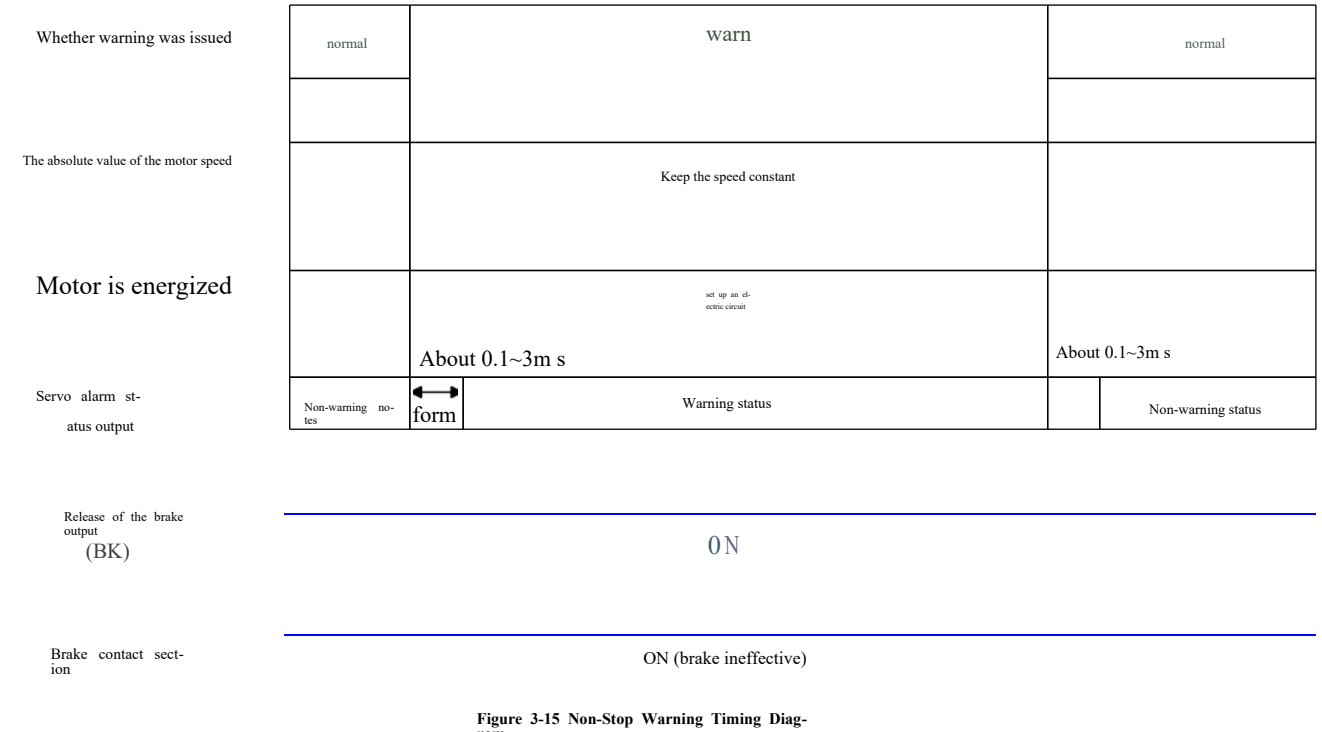

Figure 3-15 Non-Stop Warning Timing Diagram

H) Fault Reset:

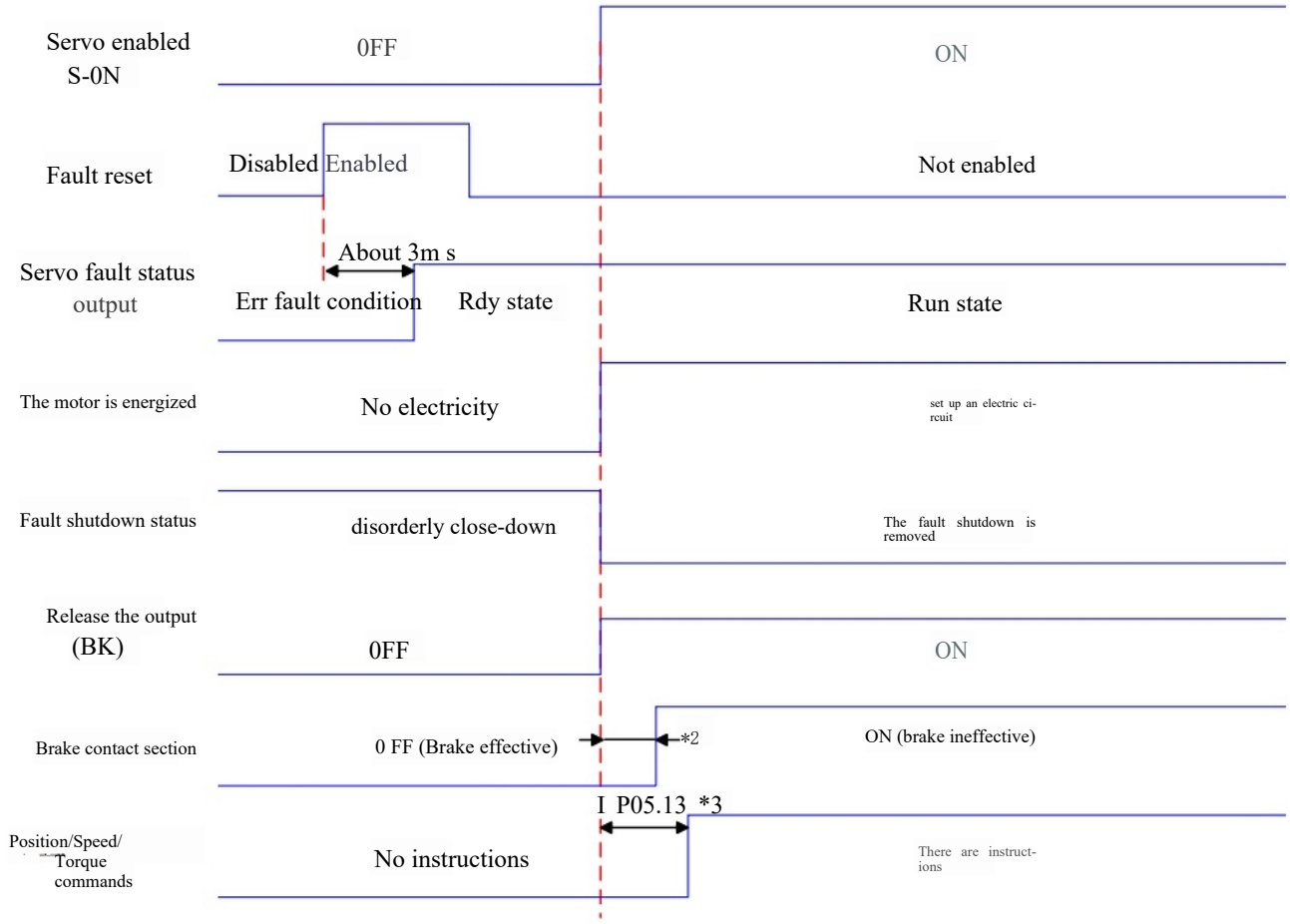

Figure 3-16 Fault Reset Timing Diagram

*** 1: DI fault reset signal (5: fault reset) is valid along with change.**

*** 2: The delay time of the brake contact part action should be referred to the relevant specifications.**

***3: When the brake enable switch (P05.12) is not turned on, P05.13 is inactive.**

3.1.7 Move

(1) Pre-operation inspection

Table 3-13 Pre-Operation Inspection Steps

item	content
Cabling inspection	1) Motor power wire UVW wire sequence (special attention) 2) Whether the ground wire is loose or short circuit with UVW 3) Whether the encoder wire is loose
Mechanical connection inspection	Check whether the mechanical part connected to the motor has strict requirements on the direction of motor movement. It is recommended that the motor be unloaded before the "safe operation" step is performed
Environmental inspections	Do not operate the motor in high temperature and humidity

(2) safe in operation

Table 3-14 Safe Operation Steps

step	description
Connect power and confirm the display on the panel	After the servo controller is powered on, the last three digits of the normal status panel are displayed as rdy. If the panel flashes the alarm code, troubleshooting should be performed according to Chapter 6
slow running	1) Drive the motor for panel point motion according to 3.2.2 2) Observe the direction of the motor. If the direction is wrong, stop the motor movement and check the driver parameters according to 3.2.1 panel introduction 3) When using DrivPRStart oscilloscope to observe the speed waveform, if the speed is wrong, check the electronic gear ratio setting or correct the unit conversion of the upper computer according to 3.1.5

(3) move

Table 3-15 Operation Steps

item	description
ganging	Connect the motor to the load after the "Safe operation" is executed correctly. It is recommended to use a multi-gasket coupling
Inertial recognition	Use the inertia recognition function to set the correct inertia ratio
gain adjustment	Adjust the gain parameters, filter parameters and advanced adjustment parameters to achieve high accuracy and high response speed control
Running under the program	Attach the driver to the device, write the control program, and perform specific functions

3.1.8 Halt

In order to meet the requirements of various working conditions, the servo driver supports different shutdown modes and shutdown states.

(1) Shutdown mode

Free shutdown: the servo motor is not powered, and the speed of the motor will be reduced to 0 due to mechanical friction;

DB shutdown: the servo motor stops under the reverse braking torque provided by UVW three-phase shorting in motion;

Slope shutdown: smooth shutdown according to the preset position速度/current slope instruction;

Zero stop: immediately set the target speed of the motor to zero and execute the stop;

Emergency torque shutdown: The servo driver outputs reverse braking torque to rapidly reduce the motor speed to zero.

(2) stopped state

Keep the position: keep the motor position, the motor shaft can not move.

Maintain the DB status: short circuit the three phase lines of UVW inside the driver, and the motor shaft cannot move freely;

Free movement state: the motor can move freely.

(3) Status of shutdown

The shutdown conditions supported by the servo driver are as follows:

Table 3-16 HR3 Series Servo Driver Shutdown Mode

Status of shutdown	Related parameters setting		Shut down action and status	description
Category 1 shutdown	P04. 10	0	Free to shut down, free to move	The shutdown status when the first type of fault occurs
		1	DB shutdown, free movement	
		2	DB shutdown, keep DB	
Category II fault shutdown	P04. 11	0	Free to shut down, free to move	The shutdown status when the second type of fault occurs
		1	Zero speed shutdown, free movement	
		2	Zero speed shutdown, keep DB	
		3	DB shutdown, free movement	
		4	DB shutdown, keep DB	
Disconnection and shutdown mode	P04. 12	0	Free downtime	The shutdown condition when the servo driver is stopped and enabled
		1	DB halt	
		2	Zero speed shut-down	
Disengaged to enable shutdown status	P04. 13	0	free motion	
		1	keep DB	
Power outage shutdown	P04. 14	0	Shut down according to the enable mode	The shutdown condition of the servo driver when the power is lost
		1	Zero speed shut-down	
Over-run shutdown	P04. 15	0	Free to shut down, free to move	The shutdown condition when the motor shaft position exceeds the preset position can be the position limit value of the servo internal software or the position at which the external limit DI is triggered
		1	Zero speed shutdown, keep position	
		2	Zero speed shutdown, free movement	

3.2 Panel Controls Operation

3.2.1 Panel Introduction

(1) Panel composition

The HR3 series servo panel consists of keys and digital tube display, which can be used for information and parameter display, parameter setting, user password setting and general function execution.

(2) Key introduction

The key functions are shown in the following figure:

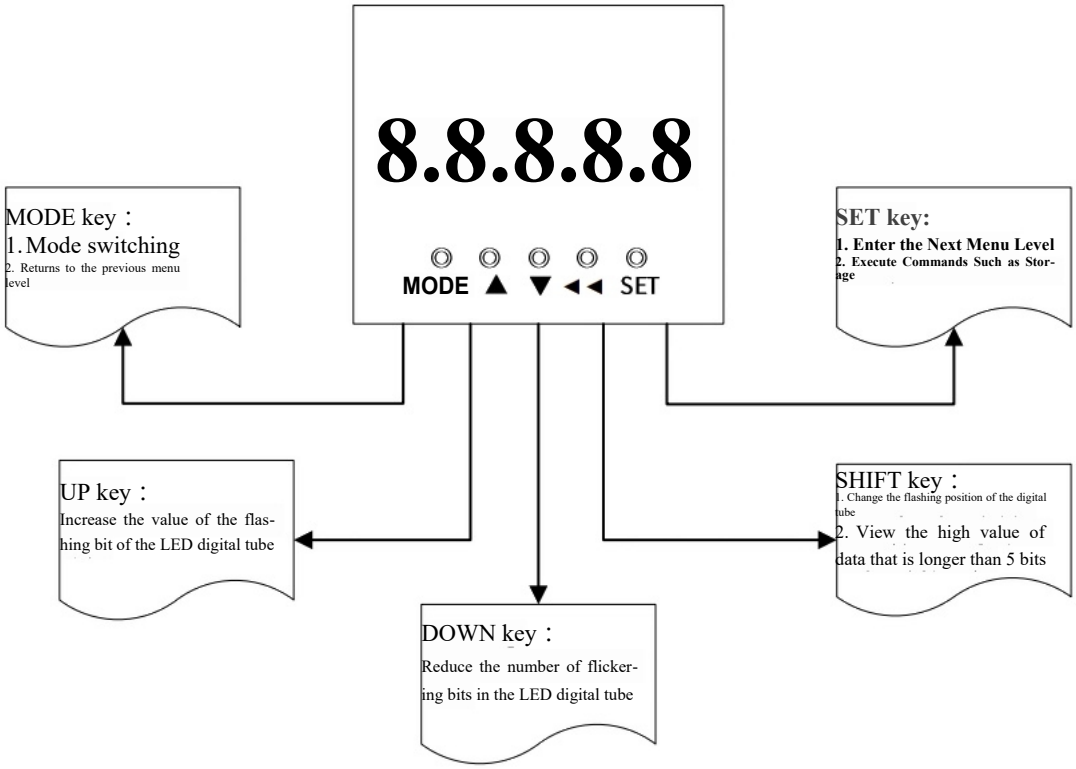

Figure 3-17 Introduction to Key Functions

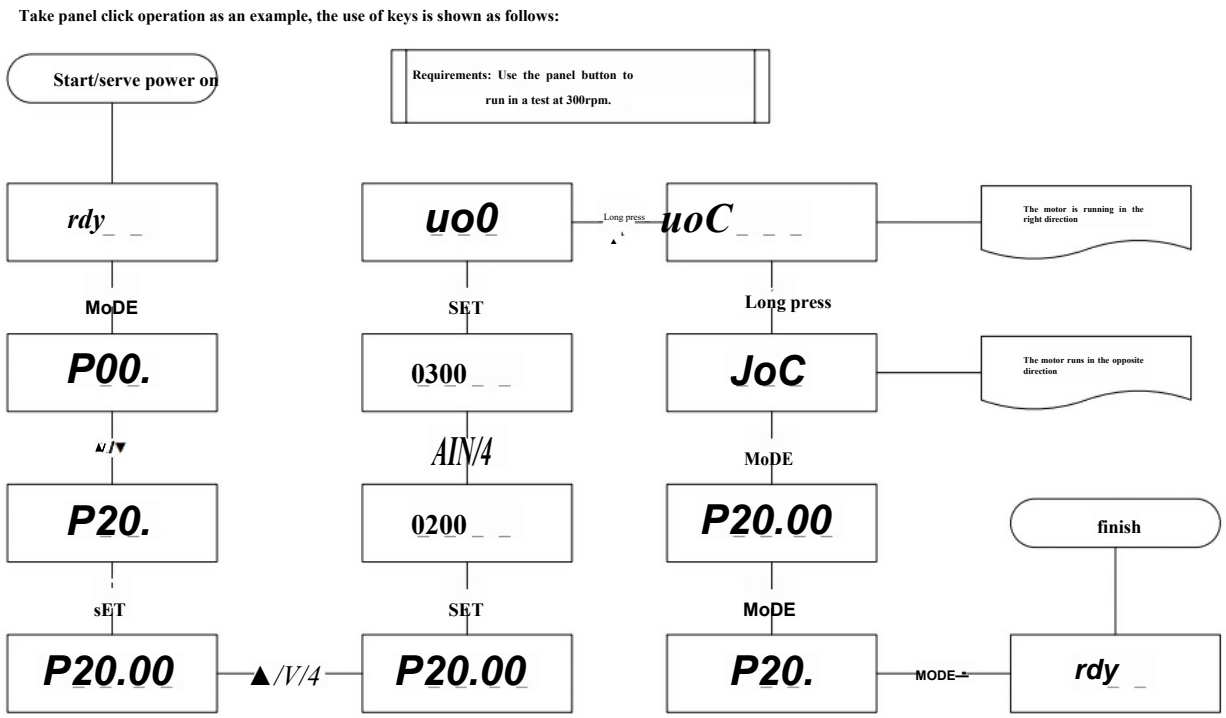

Figure 3-18 Panel Click Operation and Display Diagram

(3) Panel display introduction

The panel display is composed of 57 segment digital tubes. When the servo driver is running, the display can be used for servo status display, parameter display, fault display and monitoring display.

Panel display category

Table 3-17 Panel Display Categories

Display category	functional description	mode of entrance	give an example
situation display	Display the current state of the servo, such as servo ready, servo running, etc	1. Connect power supply and enter immediately; 2. Under the parameter display, press the MODE button to enter; 3. The monitoring shows that the motor enters when it is stationary;	rolLo
Parameter display	Display function codes and their set values	1. Under the status display, press the MODE button to enter; 2. Under the monitoring display, press the MODE button to enter; 3. Under the fault display, press the SET key first, then press the MODE key to enter;	P20. 00
Fault display	Display servo failure and warning codes	1. Under the parameter display, press the MODE button to enter; 2. Enter when a fault occurs;	E. 910. 1
Surveillance footage	Display the current operating parameters of the servo	1. Under the parameter display, set the function code to 21 groups and enter; 2. Under the status display, set function code P 05.03, and enter after motor movement;	200

Panel display content introduction

Table 3-18 Status Display Description

show class	Display content	name	Display context	Meaning
situation display	fact- ory mo uth 7 7 mo uth	rocco: Servo initialization	Servo power on moment	The servo driver is in the initialization or reset state, waiting for the initialization or reset to be completed, and automatically enters other states
	fact- ory d	rdy: The servo is ready	The servo is ready	The servo driver is in an operational state
	factory d			
	3rd-5th place Servo preparation results show: **Ready:** Drive the engine ready **NRD:** The servo is not ready. The servo has just been completed, but the main circuit is not powered on, and the servo is in an unoperable state **Run:** The servo is running and the servo enable signal is effective			

Table 3-19 Parameter Display Description

show class	Display content	name	show occasion	Meaning
Parameter display	P 2 0. 0 0	Function code: P20.00		P： FC 20: Function code group 00: Number in the function code group
	1 1 2 7 7 4 5	Data (5 digits or less) display: 12345		
	- 1 2 7 7 4	Negative data (4 bits or less) displayed as: -1234		
	- 1 7 8 9 0	The data (more than 5 digits) shows: 1234567890		: The lower four digits of multiple data

		3	4	5	6			**One: middle four digits of multiple data: high four digits of multiple data**
				4 1	2			
	.	7 ,	8	9	0	Negative data (more than 5 bits) are displayed as follows: −1234567890		One: represents a negative sign : The middle four digits of the multi-negative data: the middle four digits of the multi-negative data : Multiple high four digits of negative data
	.	3	4	5	6			
			one	1 1	2			
		1 1	0	0.	0	The decimal point is shown as 100.0		.: Decimal point, not flashing
	□	**mo uth**	π	E		Done: Parameter setting is complete	parameter setting success	The parameters are set and stored in the servo driver
	two	two		•	●	= =..: Parameter Restore factory Settings	Usage system Unified parameters When initialization (P 05.0 1) is set to 1	The servo driver is in the process of parameter initialization. Please wait for the completion of system parameter initialization, and then power on again to use it

Parameter display give an example

begin /	**Servo power on**	**Requirement: Use panel buttons to function code ""** multi-turn absolute position offset (low 32 bits) (P13.23) Input negative data: -1234567891				
rdy		. . 0091		. . 7891	finish	
MODE						
P00.		_. 0001		−. 0000		rdy
▲, /				▲/V/		Multiple MODES
P13.		. 0000		−. 3456		donE
SET		SET				SET
P13. 23	-▲/V/-	P13. 23		−00	▲/V/44	−12

Table 3-20 Fault display and monitoring display

Show Obstacle. Show. Control

Visible class, therefore, visible warning, visible monitoring

Display content	name	Display scenarios	Meaning of the expression
E. 0 1 0. 0 1	Fault code: E.010.0	Software parameter fault	E.: Obstacles Before the decimal point: The main fault code After the decimal point: fault subcode
A. 2 2 4. 0	Warning code: A.224.0	Resistor overload	R.: A warning Before the decimal point: Warning code After the decimal point: Warning subcode
2 1 1 3 4 5	Current parameter value: 12345		

Start/serve power on Use the panel button to view the current electrical Angle (P09.17) What is the value?

Control example

Automatic display

⌐dy	251. 4	Multiple MODES --	⌐d
MO DE	SET		
P00.	P09. 17		finish
P09.	Set one, **P09.00**		

3.2.2 Panel Click to Run

Before panel point operation, please check the servo system to ensure that the system is not disturbed. Connect the power supply and power on the servo system to perform panel point operation. The flow chart of panel point operation is as follows:

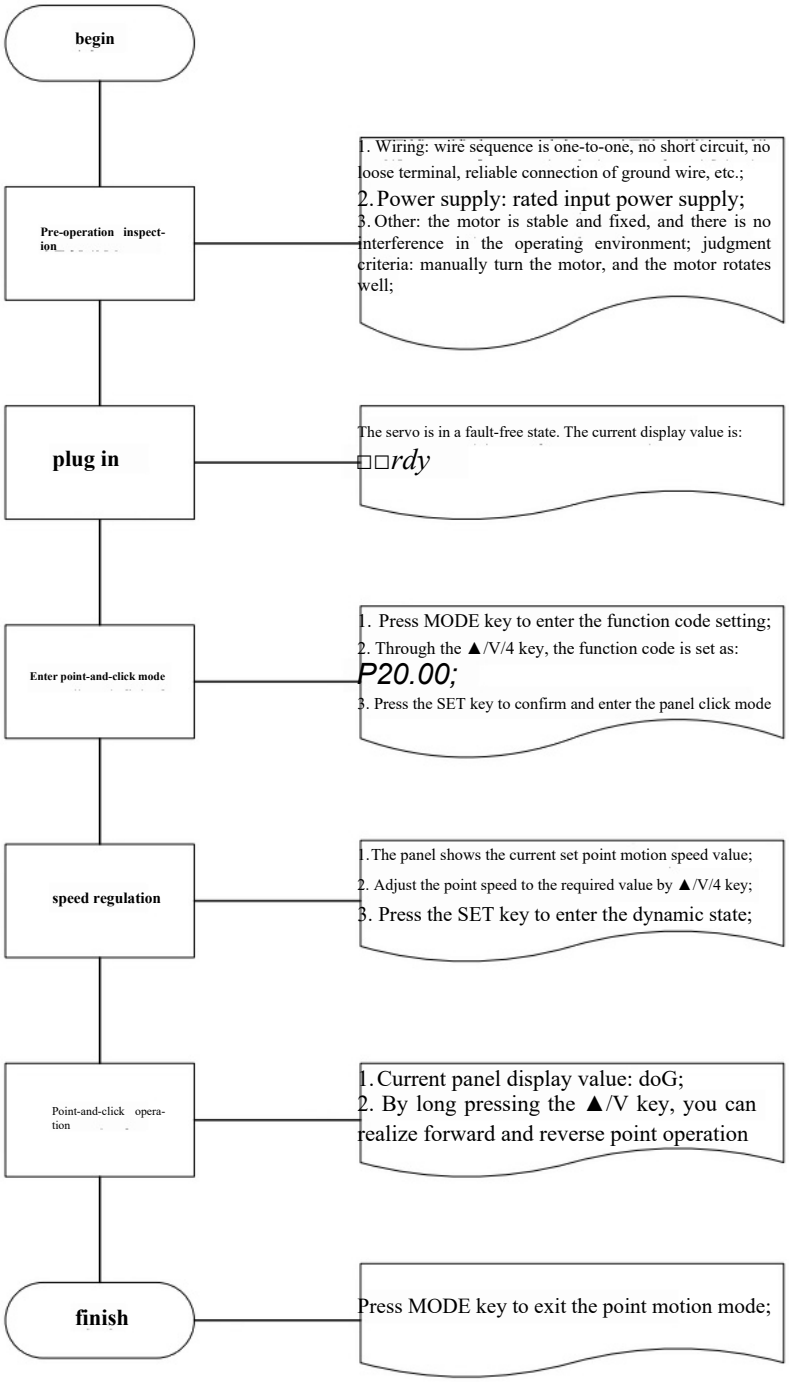

Figure 3-19 Panel Click Operation Flow Chart

Using the panel to run can confirm whether the servo system can run normally, and whether there is abnormal vibration and sound when the motor turns.

3.3 DriveStart in Use

DriveStar t is a debugging software for HR3 series servo drives.

3.3.1 Summary



Figure 3-20 Main Interface

The software is divided into three regions, as shown in the figure below:

Area 1: toolbar area, servo debugging function entrance, users can click the relevant button to enter the corresponding function window;

Area 2: functional view layer, debugging function presentation area;

Area 3: Status bar area, real-time display of equipment status; online, running status, fault information, motor running information, etc.;

3.3.2 Java Runtime Environment Java

This software is a green, no-installation version.

- service requirement

  hardware environment： PC

  Operating system: Windows7x86&64, Windows10x64, Windowsl1x64

  Dependencies:.Net Framework4.5 and above

3.3.3 Parameter Management

Click the toolbar three to set the function code parameters interface.

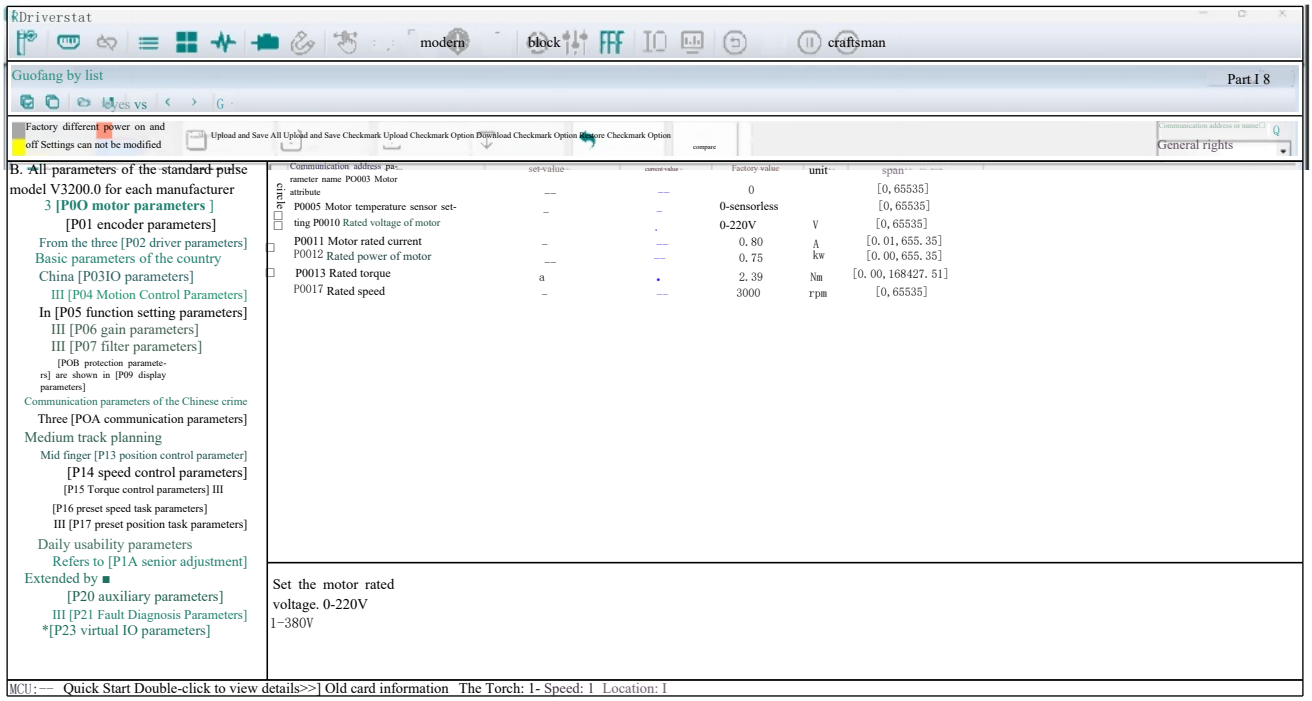

Figure 3-21 Parameter List

Toolbar area



Mouth:The function code of the current page is selected or not;

Day:Open and save the formula file. Saving the formula only saves the function codes selected on the current page; VS: Parameter formula comparison function, as shown in the figure below:

Comparison of parameter files

Document 1	C:\Users\37054\Desktop\20220427171701[V_301.0 compare
Document 2	C:\Users\37054\Desktop\20220427171718[V_301.0 ...

mailing address	Parameter name	Document 1	Document 2	unit
P0600	Speed ratio gain 1	29.6	25.0	Hz
P0601	Speed integral gain 1	21.22	31.83	ms
P0602	Location proportional	55.3	40.0	Hz
P0610	gain 1 load inertia ratio	0.74	2.00	–
P2041	The bus reads the low 16 bits of DO	33	0	–
P2042	The bus reads the high 16 bits of DO	2	0	

Figure 3-22 Parameter Comparison

Last **editing group, next editing group;** Restore factory Settings**;**

- **Viewing area**

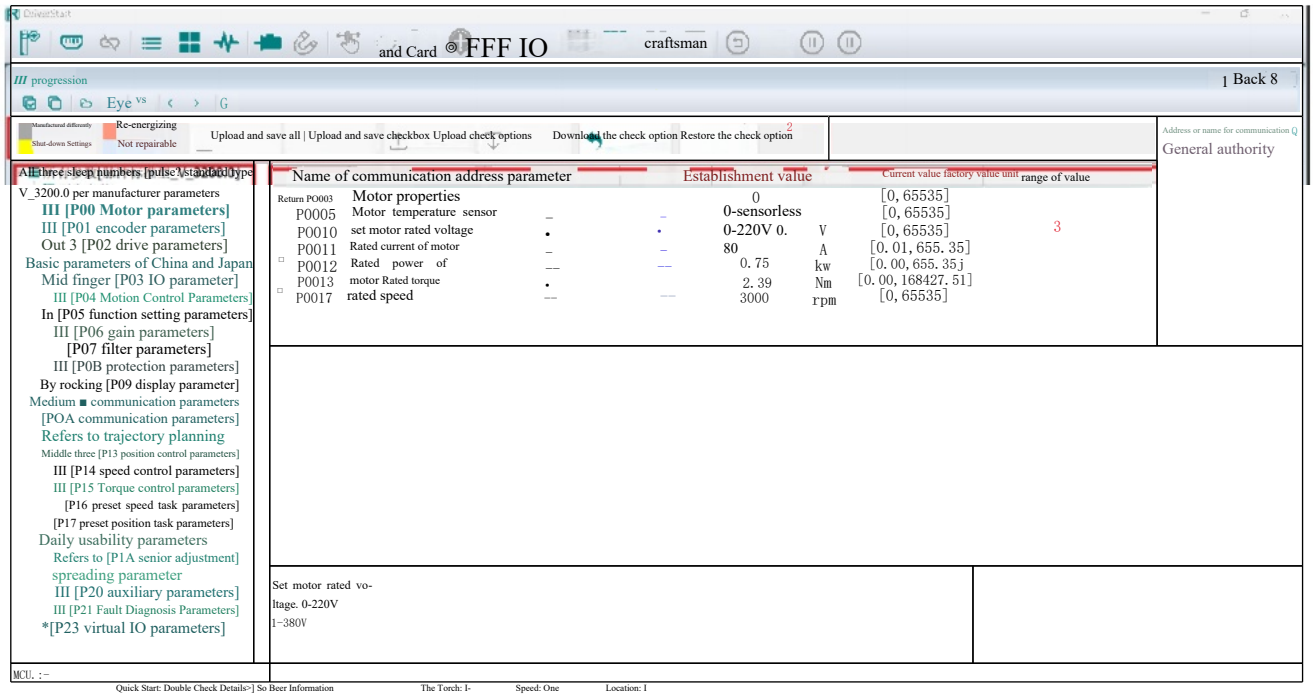

Figure 3-23 Parameter List View

1. Functional code division group: Function group division from the user's perspective to facilitate user use;

2. Operation area:

Upload check option: Read the current page from the driver, select the function code value, and update it to the set value column;

Download check option: download the function code setting value selected on the current page to the driver;

Restore checked option: restore the set value column selected on the current page to its original value;

____ Function code search, supports function code address, name, drop-down fuzzy query;

General rights ☐: Permission switching, support for general, administrator, manufacturer three permissions, different permissions display different function codes, manufacturer rights

It is limited to the use of manufacturers and is not recommended for customers;

Parameter comparison function: it supports three comparison modes, such as setting value and factory value, setting value and current value, and current value and factory value. After clicking the comparison item, the comparison view is entered. Users can click "Cancel comparison" to exit the comparison view;



3. Function Code List Area



The unmodifiable list area will display different background colors according to the function code attributes;

Setting value: The user can edit the parameters through this column. The read-only parameter font is gray and cannot be modified;

Current value: After the user checks real-time refresh, the current value column displays the driver value in real time;

4. Help: When the user selects the function code line with the mouse, the help area displays the help information of the selected function code;

● Right-click menu: parameter list area Click the right mouse button to support full selection of the current page, cancel full selection of the current page, read and write function codes, open and save formula, and save modified parameters and other quick operations.

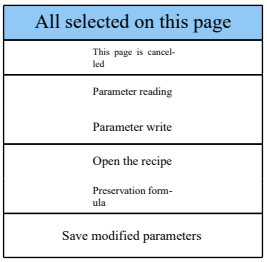

Figure 3-24 Right-click menu

3.3.4 Oscilloscope

● tool bar

: Open the waveform file, the file format is csv;

: Save the current waveform only in file format as csv;

: Take a screenshot of the current waveform display area in bmp format;

: Measurement function. Click this button to measure the waveform in the AB interval by dragging the cursor A and B in the waveform area;

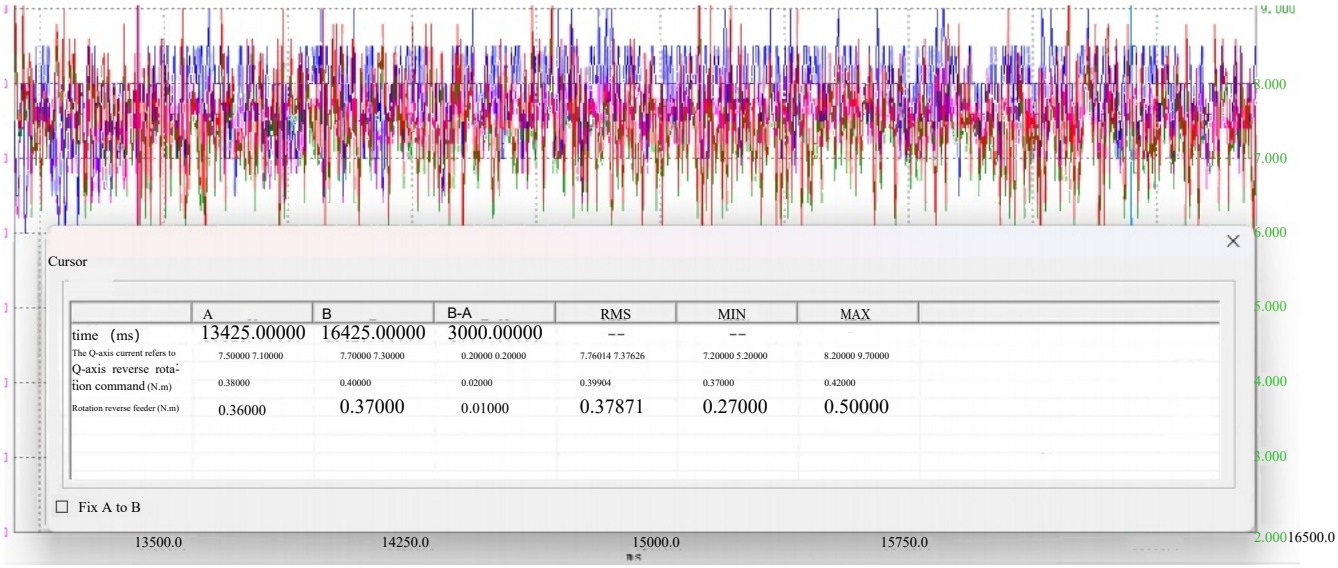

Figure 3-25 Caliper Measurement

⑨ Calibration function: Click this button, when the mouse hovers over the waveform area, the values of each channel in the waveform will be displayed at the current mouse position. +: Waveform zoom: When this button is pressed, the zoom function will be enabled; if you click the button again, the zoom function will be disabled. Mouse

Click around the waveform and zoom in on the selected area;

Q: waveform restoration. Click this button to restore the waveform to its original state;

X: Adaptive coordinate system. Click this button to automatically calculate the maximum and minimum values of the waveform for vertical coordinate adaptation .

: FFT analysis. Click this button and select the waveform area with the left mouse button. When the left mouse button is lifted, the software will perform FFT analysis and pop up the analysis results, indicating three resonance point frequencies, as shown in the figure below:

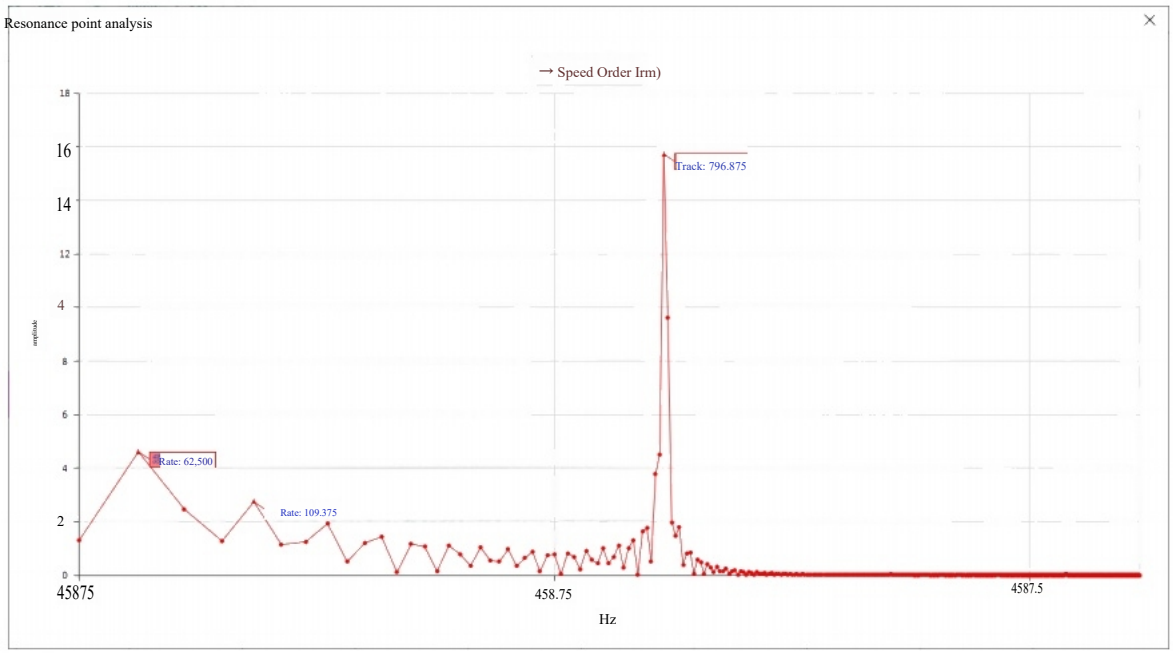

Figure 3-26 FFT Resonance Point Analysis

Waveform comparison: Click this button to select the waveform to be compared, and the waveform file in the file will be superimposed on the existing waveform area;

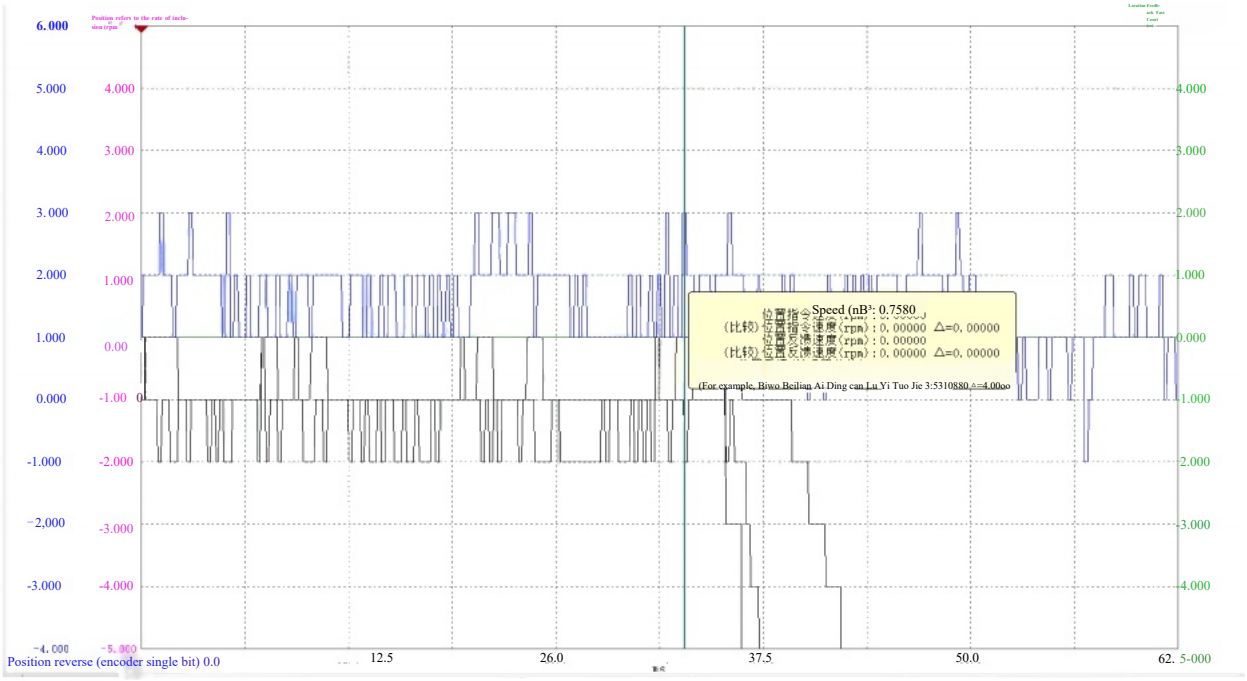

Figure 3-27 Waveform Comparison

: To cancel waveform comparison, click this button, and the compared waveform is deleted from the waveform area;

- configure

Channel configuration: The oscilloscope supports up to four channels for acquisition. Users can quickly generate channel configuration under corresponding modes through the three buttons of "position acquisition", "speed acquisition" and "torque acquisition";

Sampling mode: Triggered and continuous sampling modes are supported.

Trigger sampling: The accuracy can reach 1 times the carrier frequency, but the number of sampling points is small (1024 points per channel). Users can click the "trigger condition" button to enter the trigger condition setting interface to set the trigger condition;

Continuous sampling: The accuracy of continuous sampling is at the millisecond level, and it supports long-term continuous sampling. During the sampling process, the waveform is automatically saved to the software directory "wavedata".

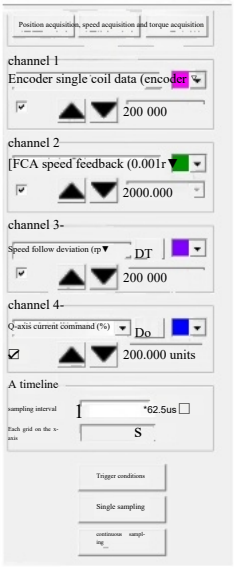

Figure 3-28 Sampling Configuration Interface

3.3.5 Initialise

(1) Motor parameter setting

Click the toolbar- Set the parameters of the motor encoder:

Motor parameter setting

open-file	L saves the file	Upload checkbox	Select Download op-tions	□check all

mailing address	Parameter name	set value	Factory value	unit	span
P0003	Motor properties	0	0	–	[0, 65535]
P0010	Rated voltage of motor	0–220V	0–220V	V	[0, 65535]
P0011	Rated current of motor	4.70	4.70	A	[0.00, 655.35]
P0012	Rated power of motor	0.75	0.75	kw	[0.00, 655.35]
P0013	nominal torque	2.39	2.39	Nm	[0.00, 42949672.95]
P0015	maximum torque	7.16	7.16	Nm	[0.00, 42949672.95]
P0017	rated speed	3000	3000	rpm	[0, 65535]
P0018	maximum speed	6000	6000	rpm	[0, 65535]
P0019	Motor inertia	1.30	1.30	kg..	[0.00, 42949672.95]
P0021	number of pole-pairs	4	4	-	[0, 65535]
P0022	phase resistance	0.500	0.500	Ω	[0.000, 65.535
P0023	inductance Lq	3.27	3.27	mH	[0.00, 655.35]
P0024	inductance Ld	3.87	3.87	mH	[0.00, 655.35]
P0025	Converse elec-tromotive force	33.30	33.30	mV...	[0.00, 655.35]
P0026	moment coefficient Kt	0.51	0.51	NA	[0.00, 655.35]
P0027	Electrical constant Te	6.54	6.54	ms	[0.00, 655.35]
P0028	Mechanical constant Tm	0.24	0.24	ms	[0.00, 655.35]
P0031	D-axis back electromotive force compensation	60.0	60.0	%	[0.0, 6553.5]
P0032	Q-axis back potential compen-sation	100.0	100.0	%	[0.0, 6553.5]
P0034 D-axis proportional gain 1		2000	2000	Hz	[0, 65535]
P0035 D-axis integral gain 1		2.00	2.00	%	[0.00, , 655.35]
P0036 Q-axis proportional gain 1 nn07 n and the public bucket total 1		2000	2000	Hz	[0, 65535]
		1 nn	1 nn		rn n 65E o51

Figure 3-29 Motor Parameter Manag-ement

- **Open the file: The debugging software has integrated the motor parameter formula related to HR3 servo, and users can directly select the motor model**

The corresponding formula. As shown in the figure below, select the formula and click the "Open" button.

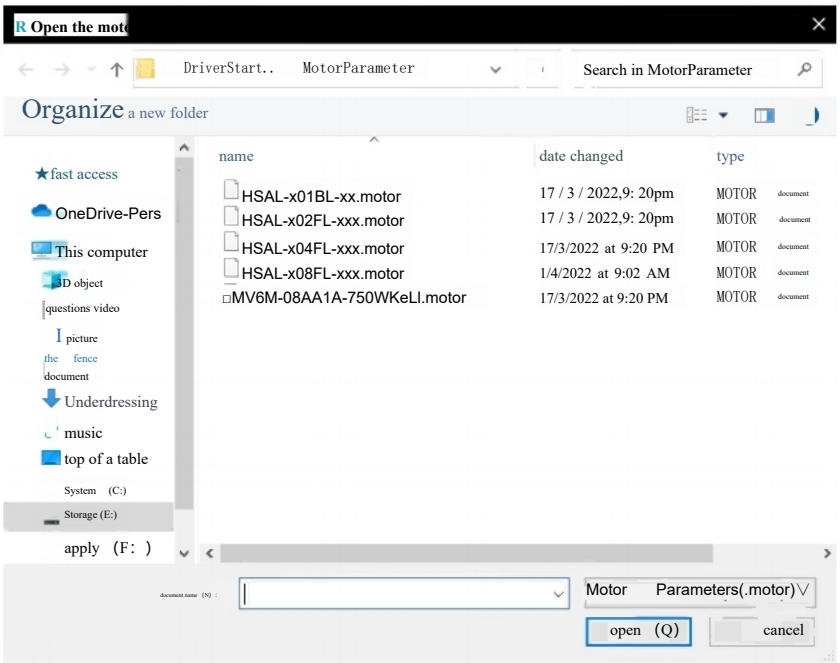

Figure 3-30 Open the Motor Parameter Formula

- **Save the file: You can edit the parameter value column, edit the parameter, and click the "Save the file" button to save the motor configuration**

square ;

- Upload check option: Read all motor parameters from the encoder;
- Download check option: check the parameters to be downloaded, click the "download" button, and download the motor parameters to the encoder.

(2) Polarization identification

This function is used for motor angle initialization during the initial operation of the motor.

Click the toolbar, Enter the magnetic pole identification interface:

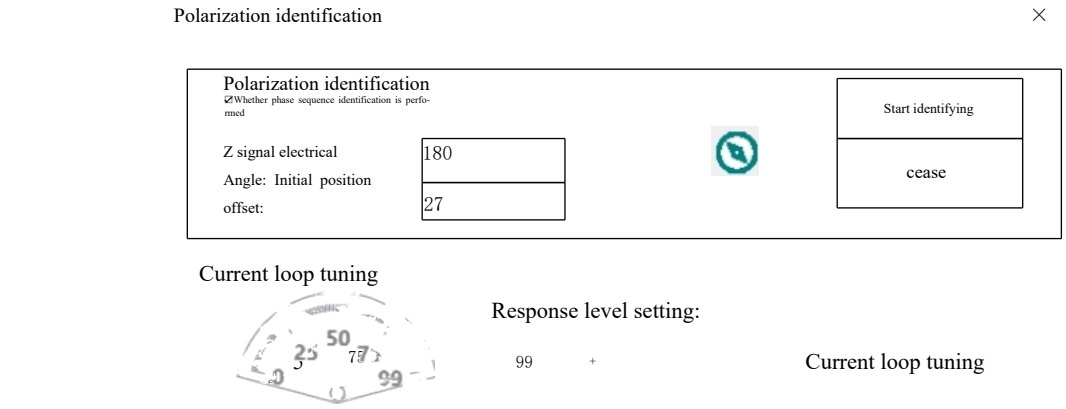

Figure 3-31 Magnetic Pole Identification

(3) DIDO supervisory control

This function is used to display DI, DO functions, status and pin wiring information. It also supports forced DI and DO output for DI and DO simulation.

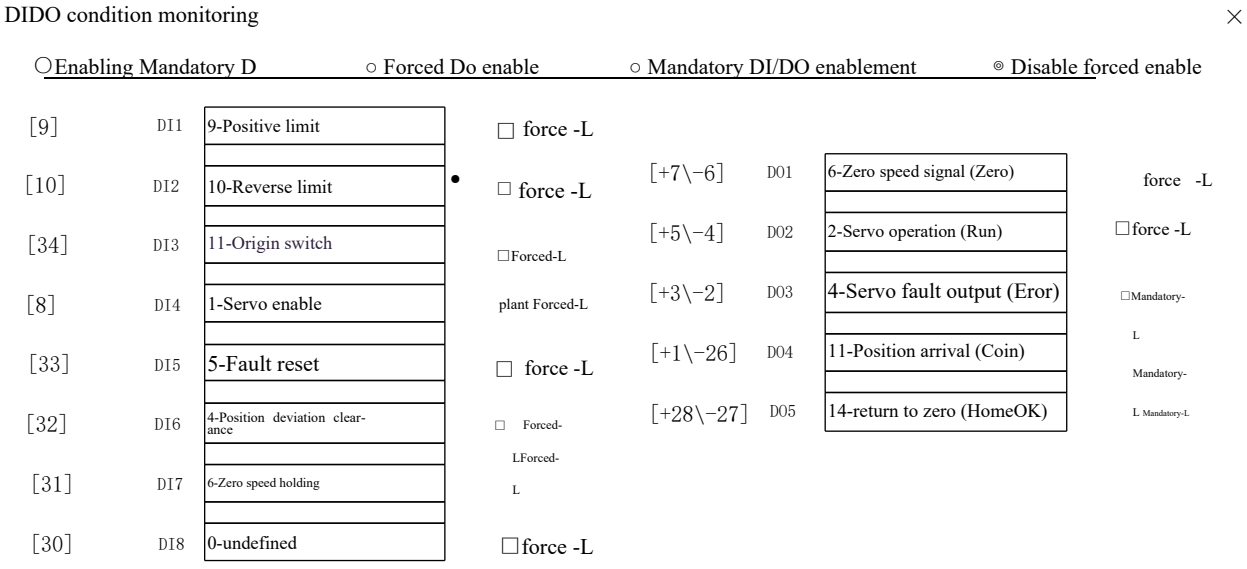

Figure 3-32 DIDO Monitoring

3.3.6 pilot run

(1) velocity JOG

This function can be used to control the rotation of the motor in a point-and-start mode, and detect whether the motor can run normally and whether there is any abnormality during rotation. Click the toolbar to enter the speed JOG interface:

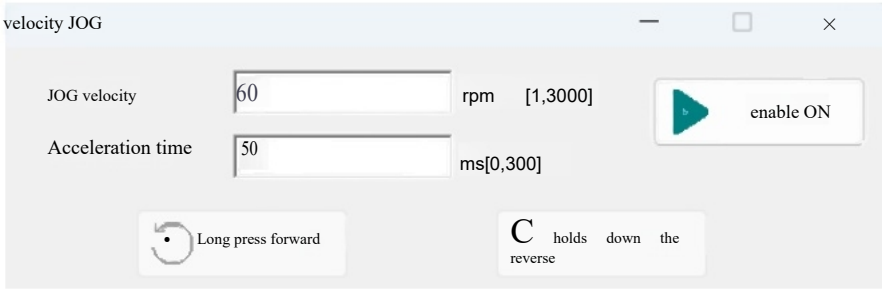

Figure 3-33 Speed JOG

Use the following steps:

1. Enter the motor running speed and acceleration and deceleration time parameters;
2. Click the enable switch to enable the driver;
3. Long press the "long press forward" and "long press reverse" button with the left mouse button to control the motor to move forward and backward; after releasing the mouse, the operation stops.

(2) position JOG

This function is mainly used to control the motor to run in a reciprocating or fixed distance mode at a specified speed within a specified operating limit position.

Click the toolbar air to enter the position JOG interface:



Figure 3-34 Position JOG

Use the following steps:

1. **Enter the motor running speed and acceleration and deceleration time parameters, click enable ON button;**

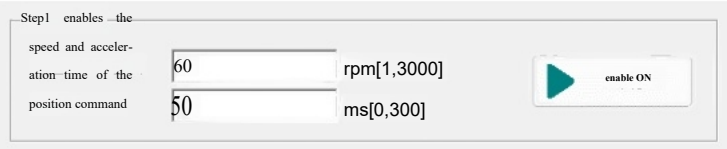

Figure 3-35 Enable ON

2. Setting of Running Limit Position: Long Press the Button "long Press Forward" and "long Press Reverse" With the Left Mouse Button to Set the Positive and Negative Limit Positions

fix：



Figure 3-36 Positive and Negative Limit Position Setting

3. **Operation curve planning: setting operation curve trajectory parameters;**

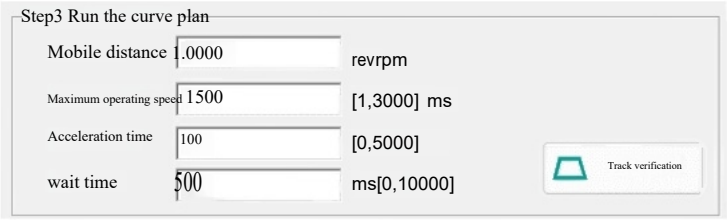

Figure 3-37 Configuration of Operating Curve

Click "trajectory verification" to generate the simulated operation curve;

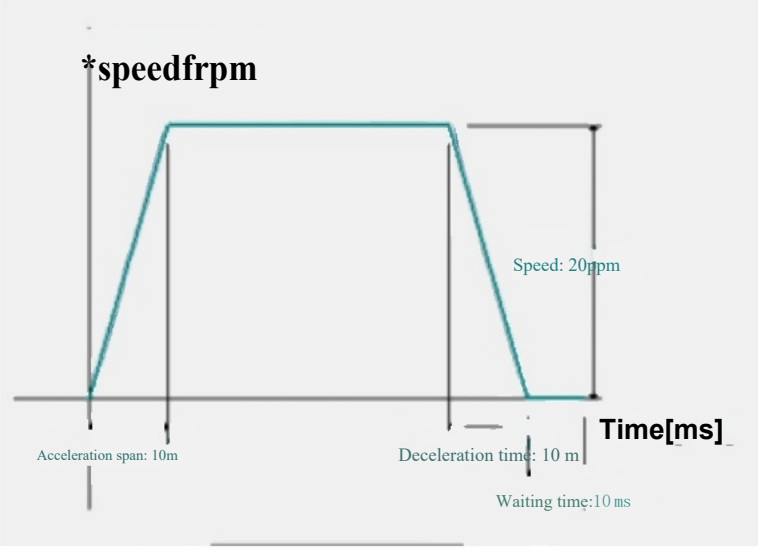

Figure 3-38 Generates the Trajectory

4. Move

Single cycle: the motor runs within the limit range and moves a specified distance.

Repetition: The motor will run back and forth within a specified limit range.

Click the button "Start forward" and "start reverse" to start running, and click the button "stop" to stop the motor;

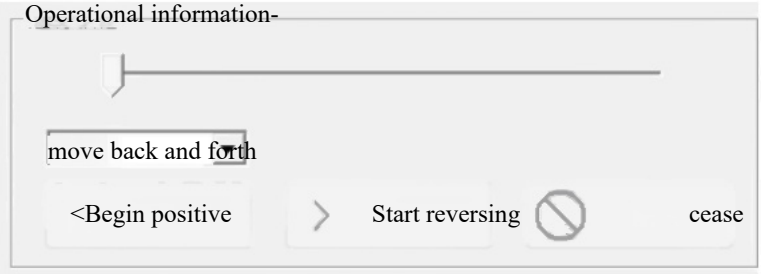

Figure 3-39 Operation

(3) Preset location tasks

This function allows users to preset multiple running tracks, up to 16.

Click bar 3 to enter the preset location task interface:

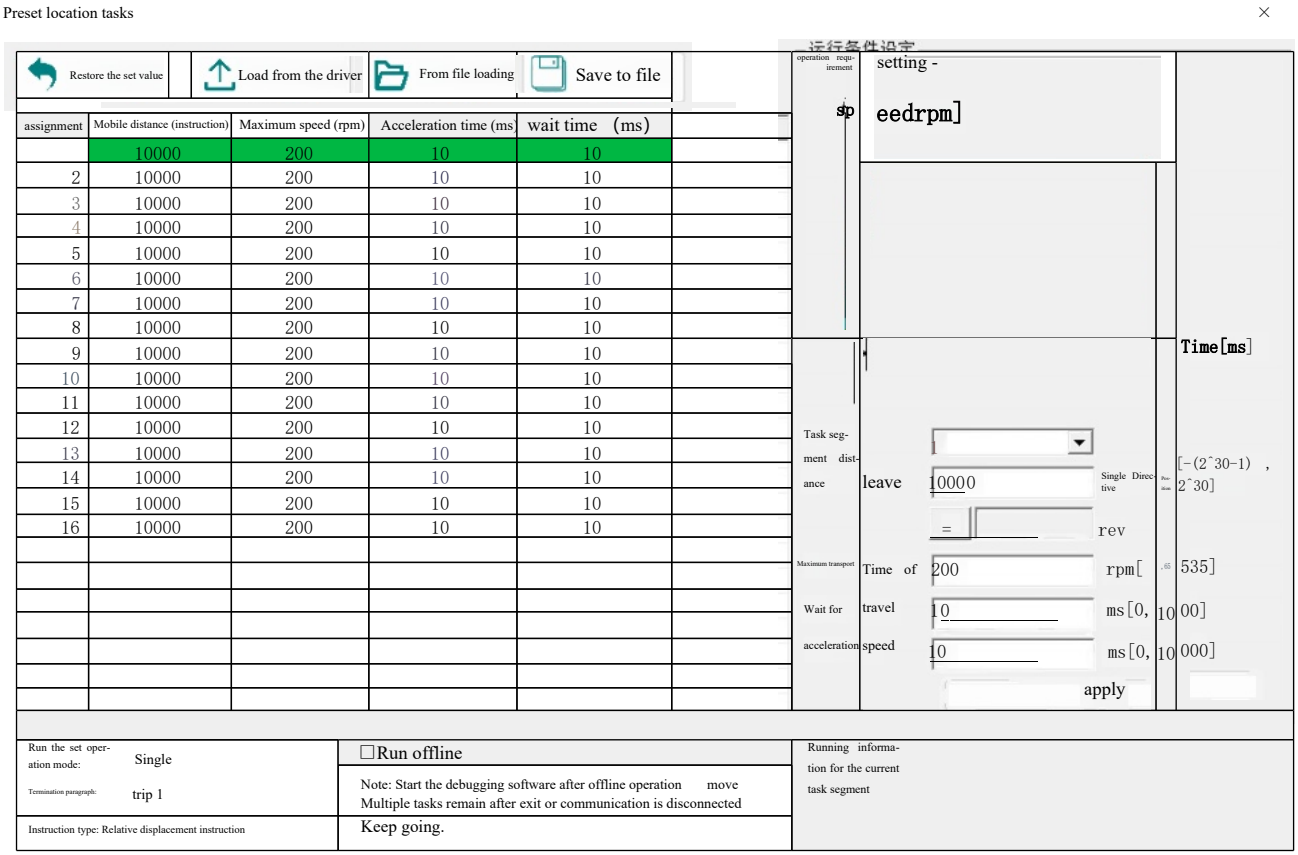

Figure 3-40 Position JOG

Use the following steps:

1. **Edit the trajectory parameters of each section: Select the specified task section in the list, edit the running parameters, and click "Apply" to update the parameters to the list;**

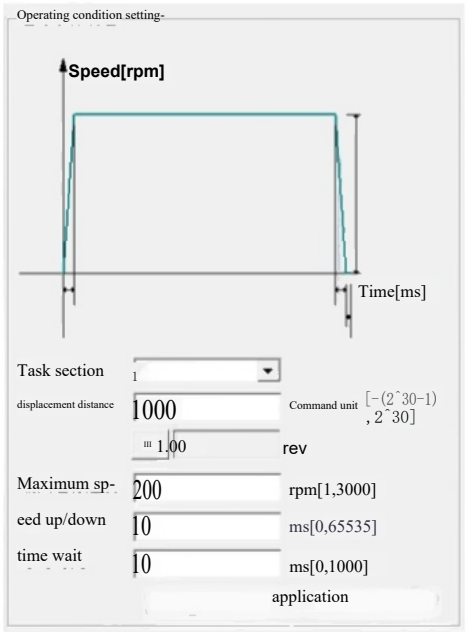

Figure 3-41, Location Segment Configuration

2. Operation Settings

Operation mode: supports single and cycle. In single mode, multi-segment location tasks are only run once; in cycle mode, multi-segment location tasks are run in a loop;

Terminated segment: The number of segments that the user can choose to execute. The program will run from the first segment and terminate only the segment;

Instruction type: support relative displacement instruction and absolute displacement instruction;

Click "Run" to start the multi-segment trajectory task, and the motor runs according to the preset trajectory;

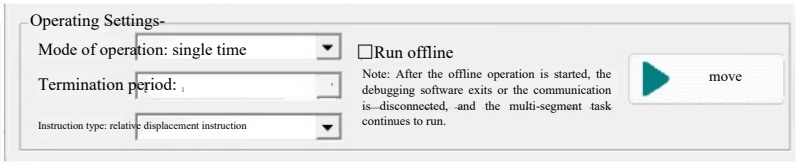

Figure 3-42 Operation

(4) Return zero

This function supports 35 kinds of zero return modes. Users can directly select the mode, or generate corresponding zero return modes according to the origin return mode, starting direction, encountering limit trajectory, and zero return completion position.

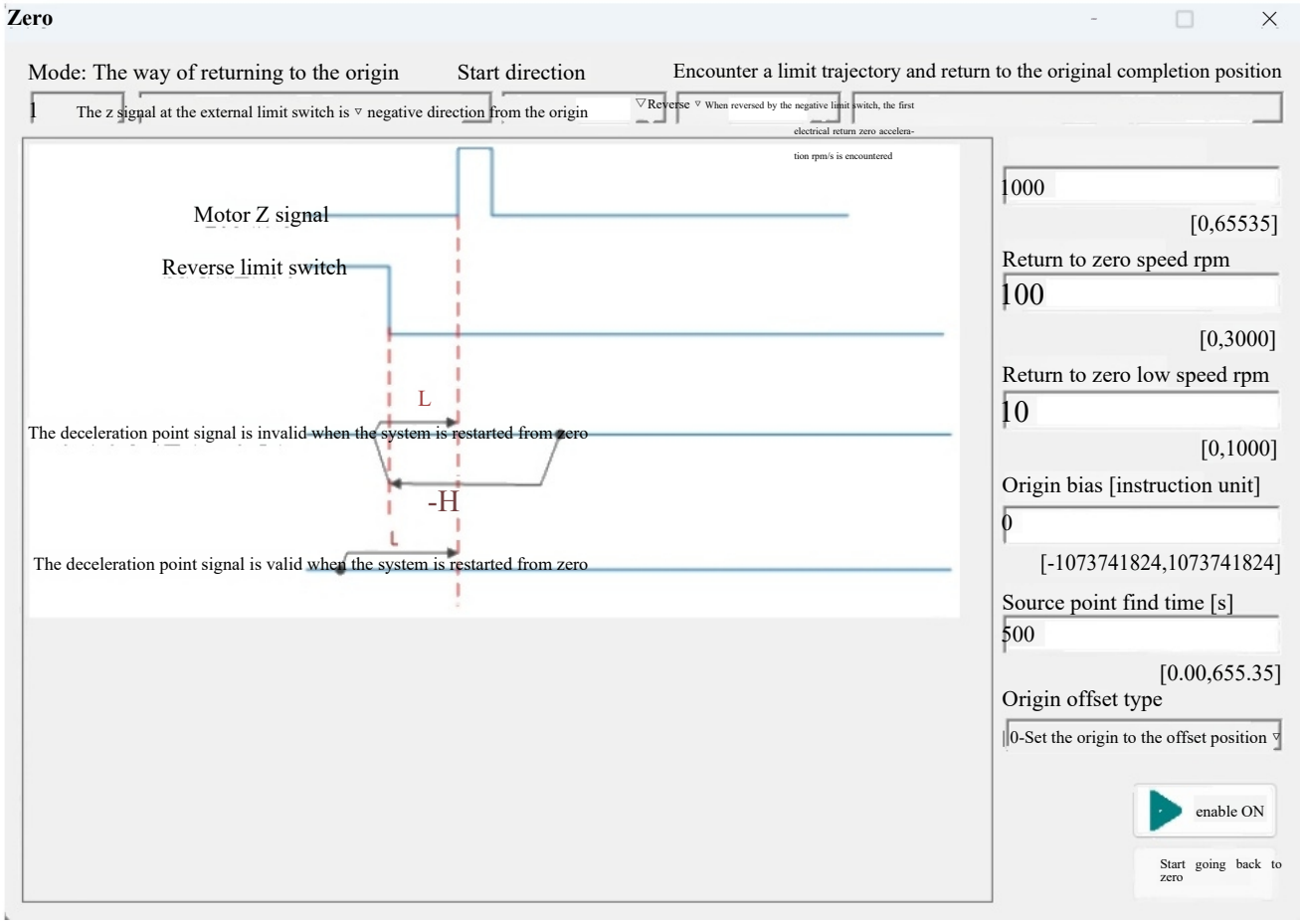

Figure 3-43 Return Zero

3.3.7 Harmonious

(1) Offline inertia identification

This function is based on offline inertial identification.

Click the toolbar to enter the offline inertia identification interface:

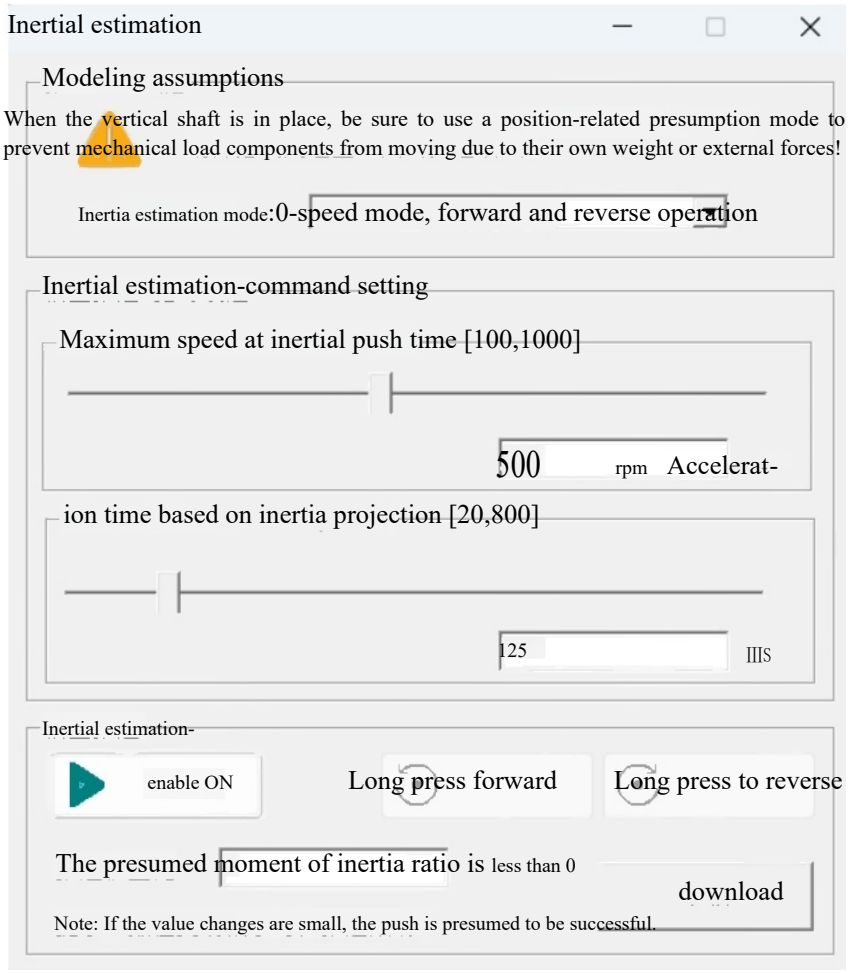

Figure 3-44 Inertia Identification

Use the following steps:

1. Parameter setting: set identification mode, maximum speed and acceleration time. The software supports four modes: "0-speed mode, forward and reverse operation", "1-speed mode, electric operation", "2-position mode, forward and reverse operation" and "3-position mode, one-way operation";
2. Click the enable switch to enable the driver;
3. Long press the "long press forward" and "long press reverse" buttons with the left mouse button to identify inertia,
4. The presumed moment of inertia ratio is 0.58 The current identification result is displayed in real time. When the value of the identification result changes very little, it can be judged as the identification result

Click the "Download" button to write the identification results to the drive.

(2) gain adjustment

The software supports two gain adjustment modes: automatic gain adjustment and manual gain adjustment.

- automatic gain control

Users can drag the slider or click the "-" and "+" buttons to lower or raise the rigid level.

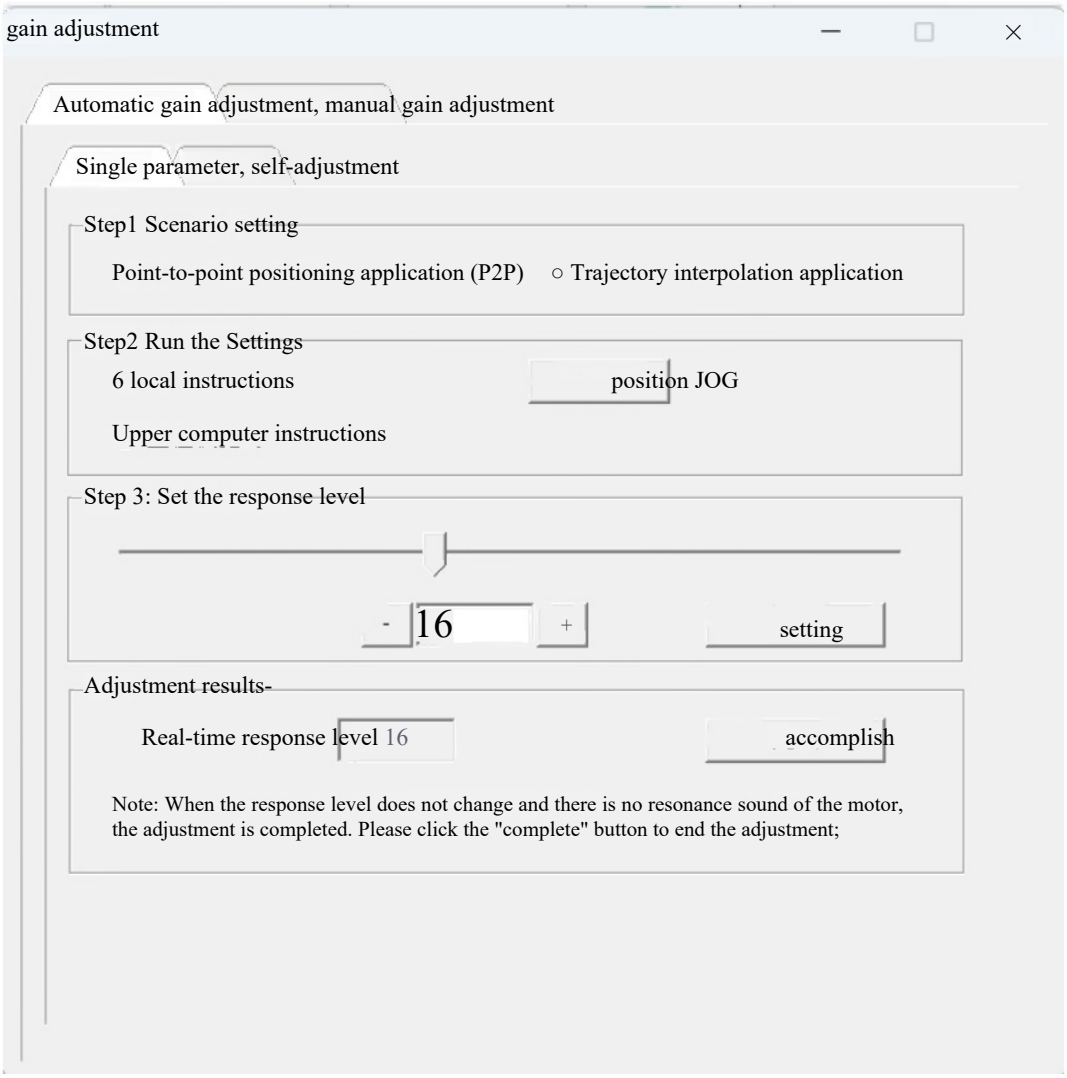

Figure 3-45, Rigid Table Setting

- **Manual gain adjustment**

The instruction form supports two forms: sine wave and step. It supports the adjustment of loop gain under three control modes: position, speed and torque.

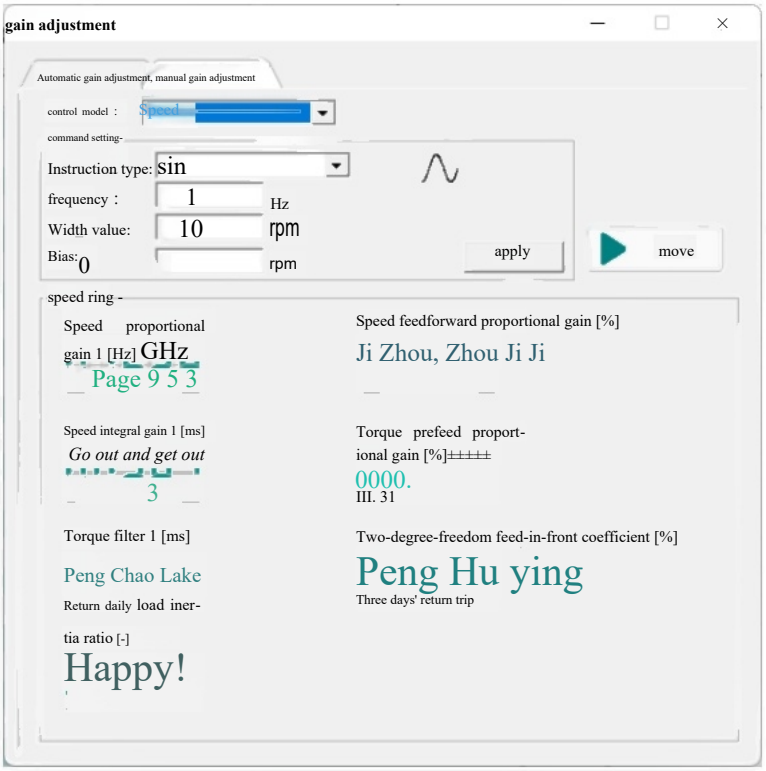

Figure 3-46 Speed Ring Gain Adjustment

(3) frequency-domain analysis -FRF

Frequency domain analysis supports three modes: speed closed loop, speed open loop, and mechanical characteristics.

- Speed closed-loop: automatically calculate and annotate amplitude bandwidth and phase bandwidth.

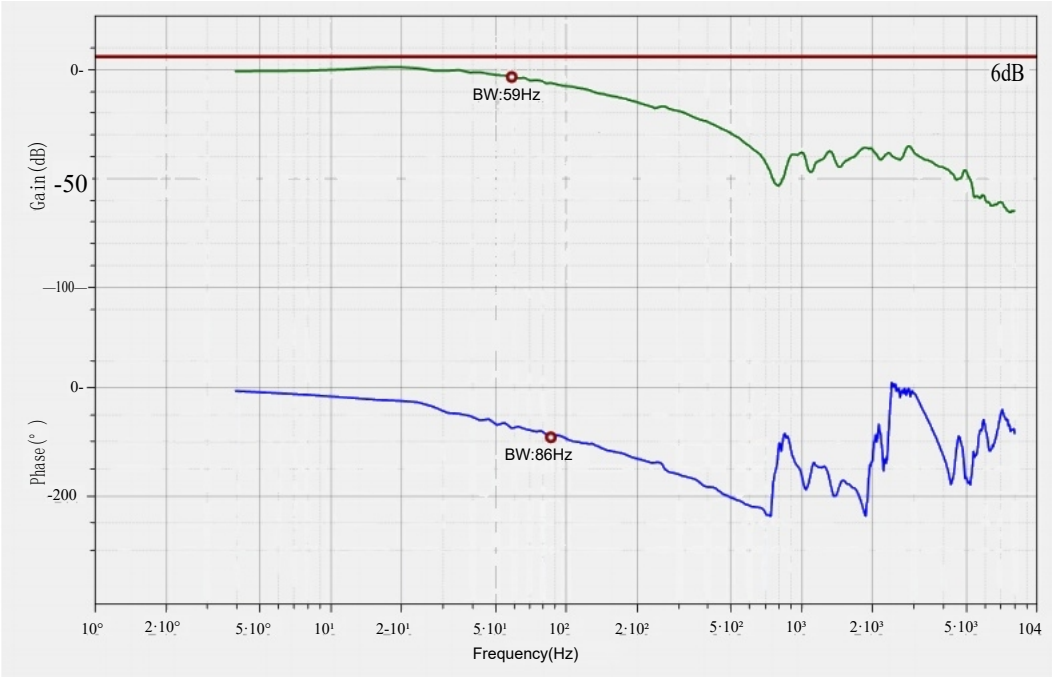

Figure 3-47 Speed Closed Loop

- **Speed open-loop: automatically calculate and mark the amplitude margin and phase margin.**

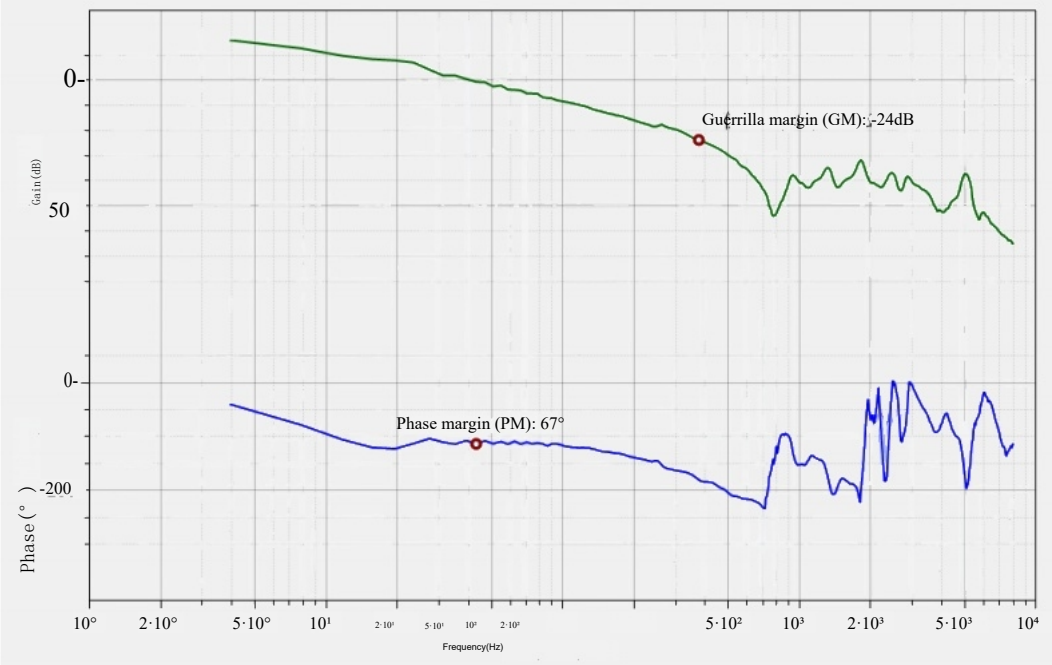

Figure 3-48 Speed Loop

- **Mechanical characteristics: Automatic identification of resonance points and anti-resonance points. At present, the debugging software will automatically identify two resonance points. After identification, the parameters are automatically updated to the notch filter, and users can directly click to download and write the identified resonance point frequency into the driver.**

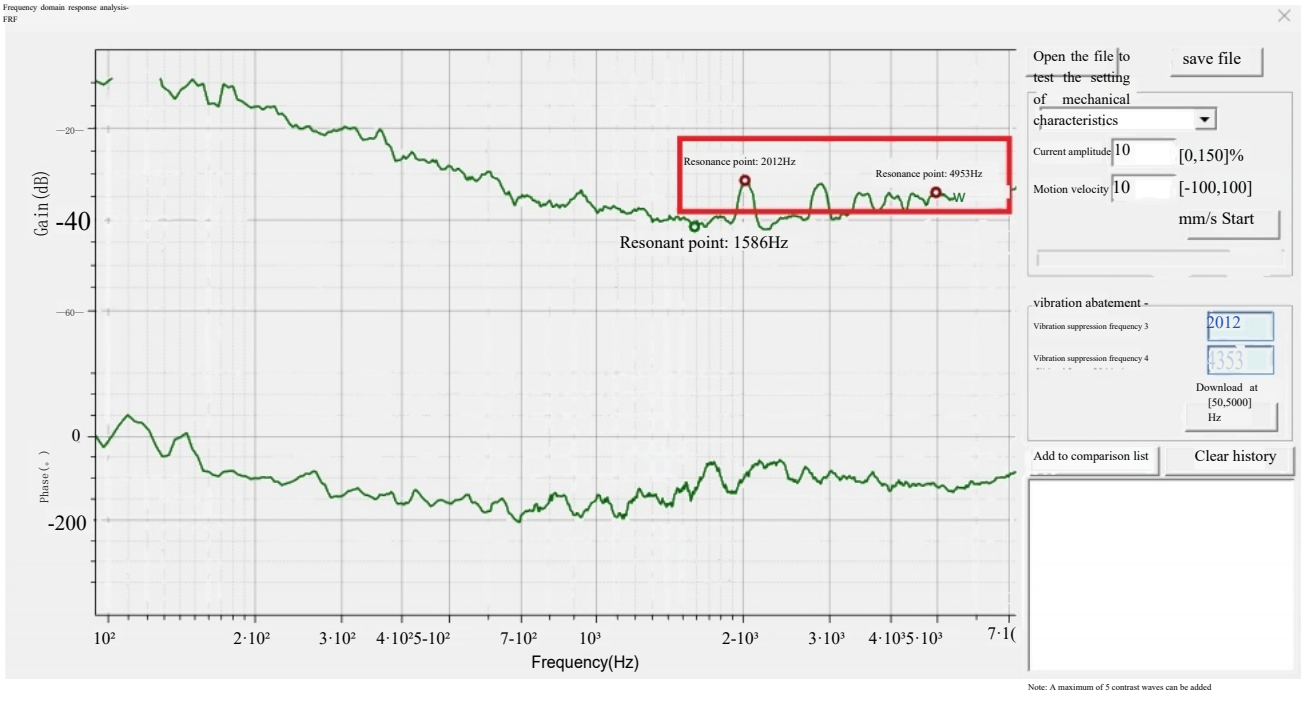

Figure 3-49 Mechanical Properties

3.3.8 Troubleshooting

(1) real time fail

When the equipment is faulty, the debugging software status bar prompts the user in real time (as shown below). The user can double-click the fault area to view the details of the fault. Red indicates the fault and yellow indicates the warning.



Figure 3-50 Fault Indication

The fault details include: fault name, level, whether it can be reset, fault cause, detection method and solution, etc., so that users can quickly troubleshoot the fault.

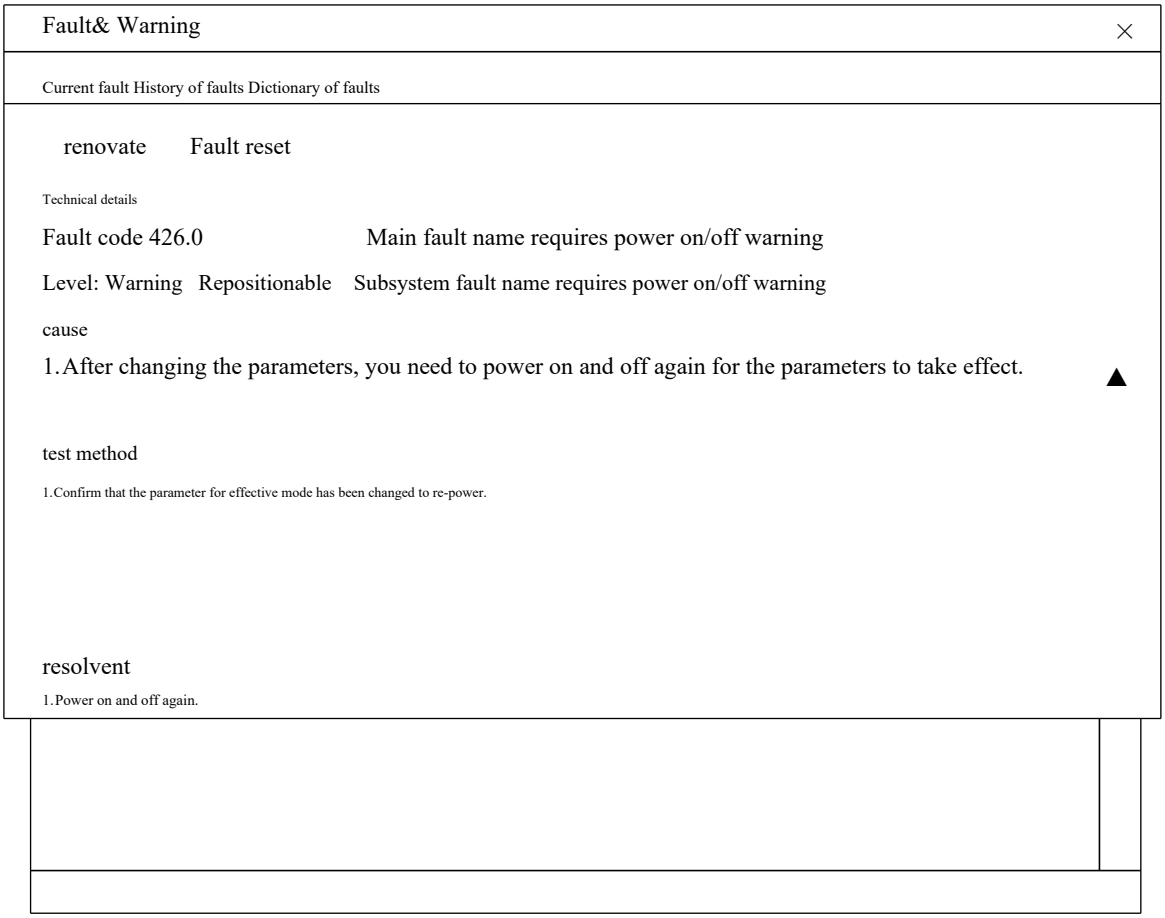

Figure 3-51 Fault Diagnosis

(2) History of failures

This function supports the query of the last 10 historical fault information.

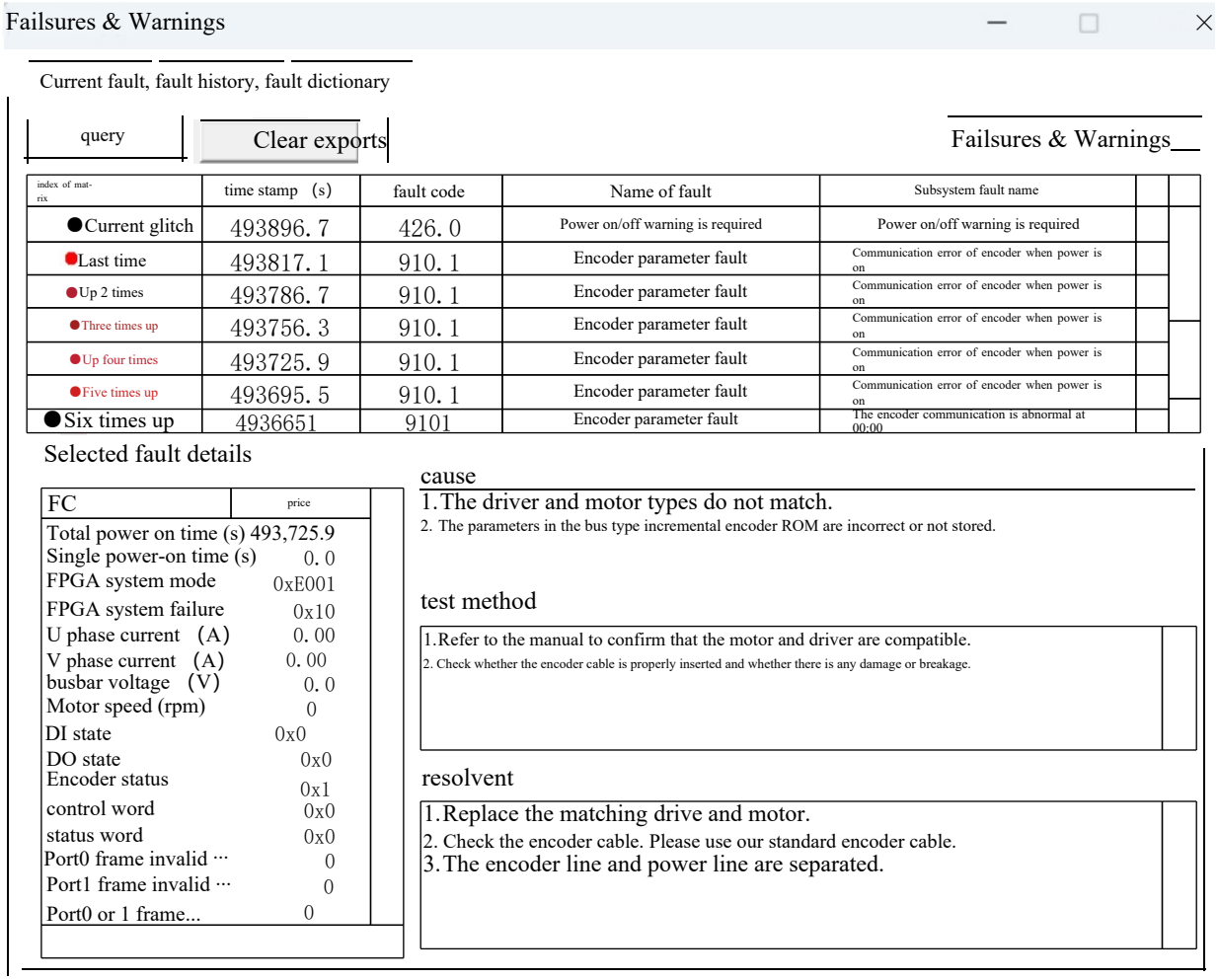

Figure 3-52 History of Faults

"Query" button: query the recent fault history of the device, information as above;

"Clear" button: Clear the historical fault records in the drive;

The mouse selects the historical list row, and the relevant parameters and troubleshooting information related to the selected fault are displayed below the list;

(3) fault dictionary

This function can query all the fault information of HR3 series servo;

Fault& Warning ×

Current fault History of faults Dictionary of faults

6-PR	[010.0][Software parameter fault]

Technical details

Fault code 010.0	Main fault name	Software parameter fault
Grade: Class 1 non-resettable	Subsystem fault name	The manufacturer's parameters are not checked properly
cause		

1. The software was updated.
2. The parameters are stored with a momentary power failure.
3. The number of parameter writes exceeded the maximum within a certain period of time.

test method

1. Confirm whether the software has been updated.
2. Confirm whether there is a momentary power failure during parameter storage.
3. Confirm whether there is frequent parameter writing in the host computer.
4. After power on and off repeatedly and restoring factory parameters, the fault still exists.

resolvent

1. Restore factory parameters (P0501=1).
2. Power on again. After system parameters are restored and initialized (P0501=1), parameters are re-written.
3. Change the parameter writing method.
4. Replace the servo driver.

Figure 3-53 Fault Dictionary

Chapter 4 Basic Functions

4.1 Functional Overview

functional module	Function points (full series)	functional specification
Input and output signals	5 LED, 5 keys	Parameter setting, status display;
	8 Road DI	Sampling period: DI~1ms
	5-DO output	Minimum holding time: 1ms. Load capacity: 50mA, voltage range: 5V~30V.
	Low speed pulse input	Differential input: up to 500KHz
		Cathode open circuit: up to 200KHz
	High speed pulse input	Only differential input is supported: up to 4MHz
	Frequency division output	Maximum 4MHz differential output
	Dynamic braking function (DB)	support
	Release control function	Power loss discharge/overvoltage discharge/diode break detection
	USB shakedown test	DriveStart

Location control mode	Source of location instructions	Pulse input preset position/position Jogging
	Command filtering	Mean/low-pass/instruction notch/instruction integer
	position feedback	Incremental mode/absolute linear/absolute rotation
	Electronic gear ratio	–
	Soft limit	–
	Status outputs	Positioning complete/positioning near/movement complete

Speed control mode	Source of speed instructions	Keyboard given/communication given preset speed/Speed JOG
	rate limitation	-
	Speed feedforward	-
	Zero speed clamping	-
	Status outputs	Motion signal/zero speed signal/velocity arrival/velocity consistency

Torque control mode	Source of torque command	Keyboard given/communication given
	Command filtering	Two low pass filters
	torque limitation	
	rate limitation	
	Torque feedforward	
	Status processing	Torque reached/ Torque limited/ Speed limited

control algorithm	Table of standard rigidity	Maximum rigidity up to 41 levels
	Adaptive gain adjustment	-
	feedforward control	
	Gain switching	-
	Single parameter self-adjustment	-

	Offline inertia identification and online inertia identification	1
	Adaptive notch filter	
	vibration abatement	Type A vibration control, torque second order low pass filter
	Two degree of freedom control	
	Speedometer	
	Bandwidth characteristic analysis	Draw open-loop and closed-loop Bode plots of control system
	Jagged observer	-
	Model tracking control	-
	Death zone compensation	-
	Motor parameter identification	-
	Polarization identification	-
	Current loop self-tuning	-

defencive function	fault treatment	Fault display/storage/Reset
	Driver hardware exception protection detection	Input deficiency, overvoltage, undervoltage, overcurrent, soft start abnormal, discharge overload, driver overload, driver overtemperature and so on;
	Driver software exception protection detection	Parameter storage fault, product matching fault detection and so on;
	Motor abnormal protection detection	Ground short circuit detection, motor overheating, motor overload, motor overspeed, phase sequence error, output phase loss, etc.;
	Encoder exception protection detection	Encoder wire break, encoder communication abnormal, encoder battery abnormal, encoder count detection abnormal and so on;
	Movement control abnormal protection detection	Positive and negative overtravel protection, runaway protection, command overspeed, position deviation is too large, zero return timeout, etc.;
	Abnormal performance algorithm protection detection	Inertia identification fault, magnetic pole identification fault, motor parameter identification fault and so on;

DrivPRStart shakedown test	Debugging support features	Back-end speed Jog/position Jog/ preset position/ return to zero/mechanical characteristic analysis/inertia identification/single parameter gain adjustment
		Time domain tuning/frequency domain characteristic analysis/current loop parameter tuning/parameter identification/magnetic pole identification, etc
	electron oscillograph	Continuous oscilloscope/single sample
	fault diagnosis	Real-time faults/History of faults/Dictionary of faults
	Operation status monitoring function	Parameter implementation shown

Other functions	Multiple shutdown modes	Zero Speed / Quick Turn / Slope / DB / Free
	Real-time mode switching	-
	Servo operation status monitoring	Load rate, bus voltage, DIDO level, position feedback, position deviation, etc.;
	CALL function	
	Software reset	-
	User password settings	
	Parametric power failure preservation	-
	Parameters are restored to factory in one click	

4.2 Control Model

4.2.1 Location Control Mode

"Instruction unit": refers to the smallest distinguishable value input from the upper device to the servo driver. "Encoder unit": refers to the value of the input instruction after electronic gear ratio processing.

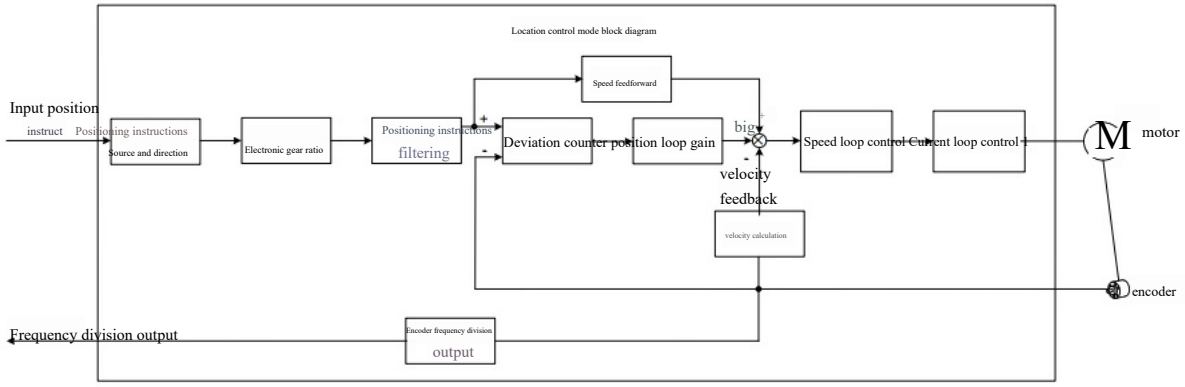

Figure 4-1 Position Control Block Diagram

Set the value of parameter P04.00 to 1 through the servo driver panel or DrivPRStart debugging platform. The servo driver will operate in position control

Production model.

Please set the parameters of the servo driver according to the mechanical structure and indicators. The following describes the basic parameters when using the position control mode.

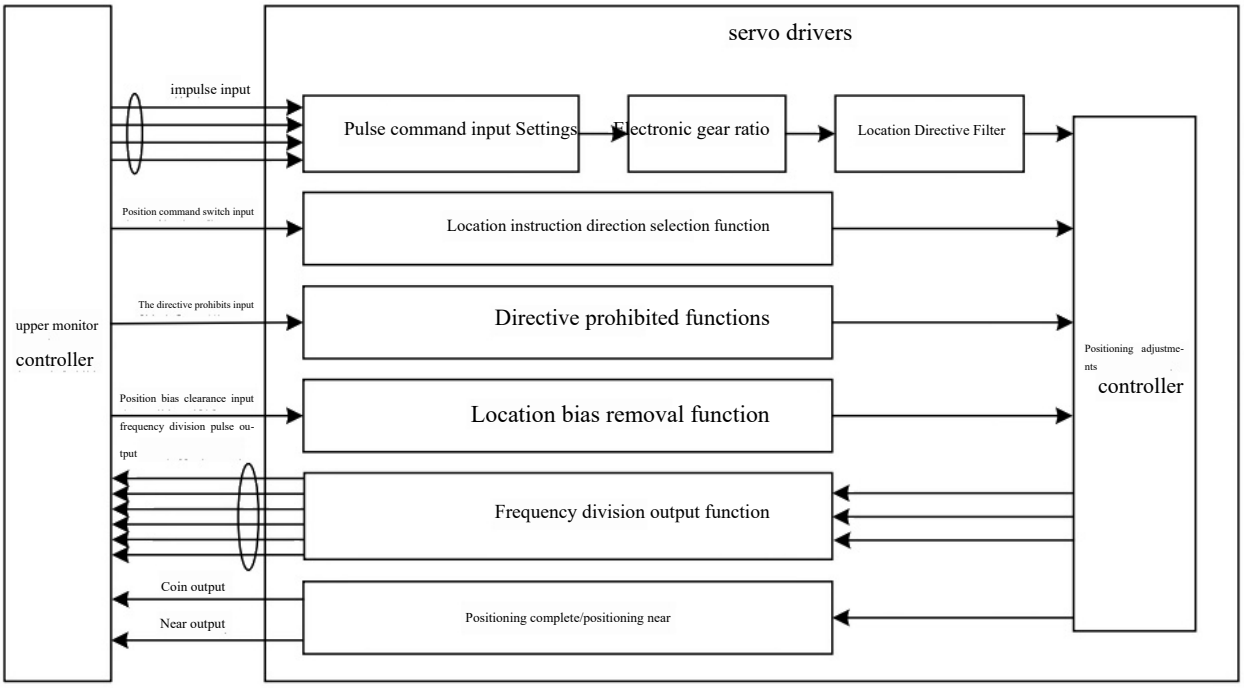

Figure 4-2 Signal Interaction Between Servo Driver and Host Computer

4.2.1.1 Source Selection of Location Instructions

Position instruction input Settings include: position instruction source, position instruction direction, and position instruction prohibition.

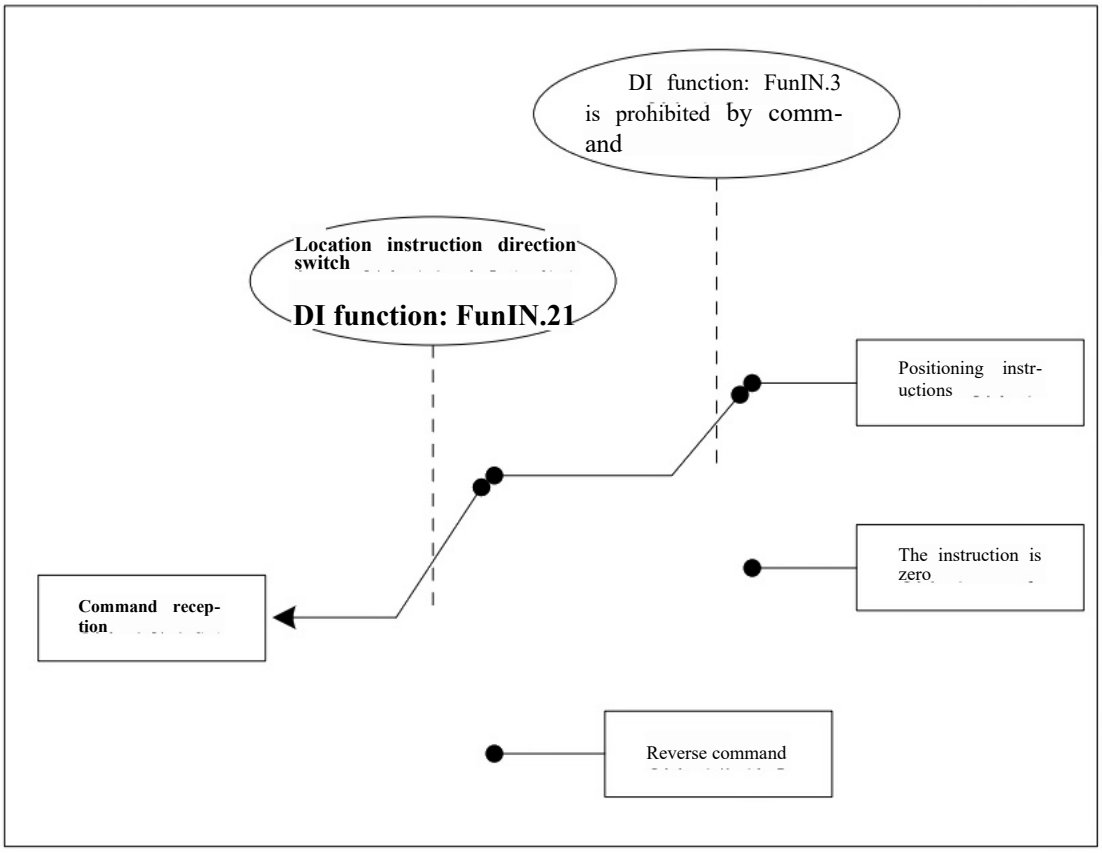

Figure 4-3 Position Instruction Input Configuration Block Diagram

1. Source of Positional Commands

In position control mode, the source of the position instruction should first be set through function code P13.00.

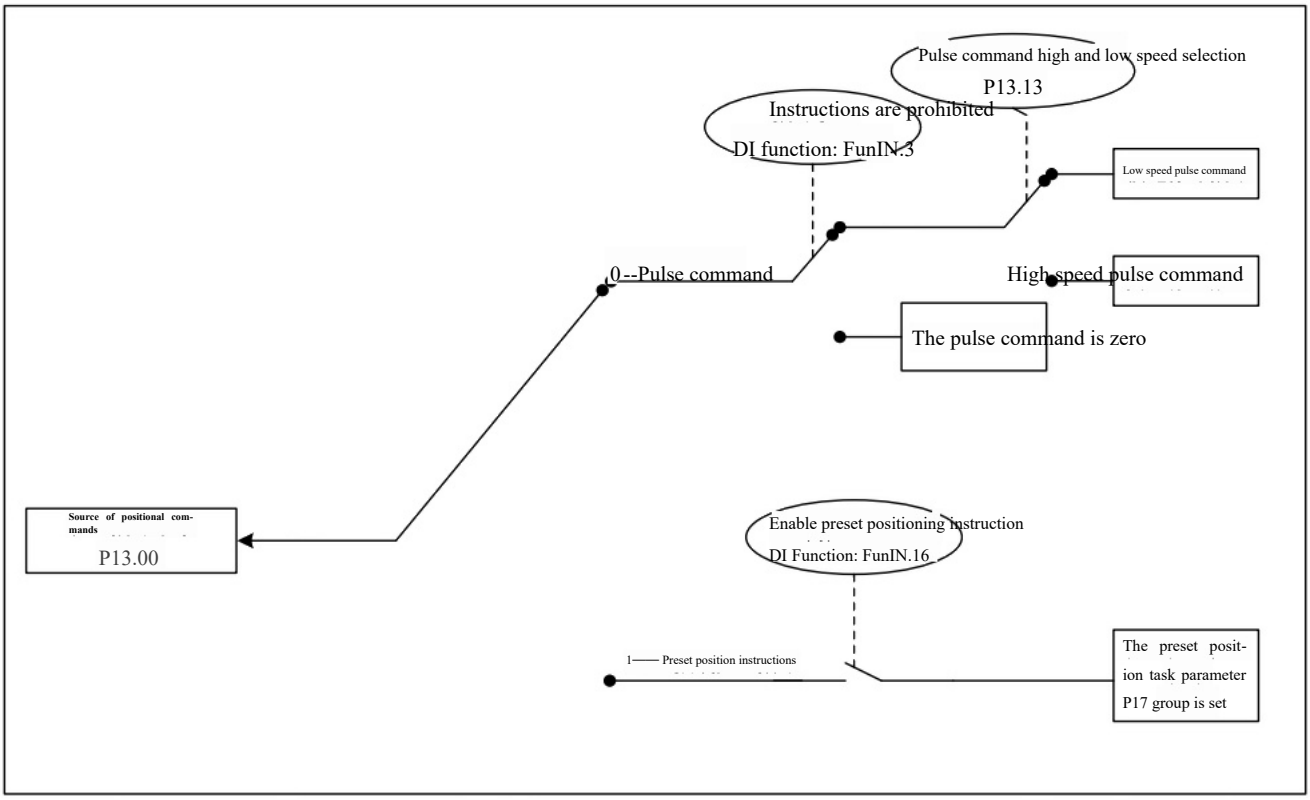

Figure 4-4 Setting the Source of Position Instructions

FC		name	Set the scope	function	Setting the way	entry-into-force time	Factory Settings
P13	00	Source of positional commands	0-pulse command 1-predefined position command	**Set the source of position instructions. Among them, pulse instructions are external position instructions and preset position instructions are internal position instructions.**	Shut down setting	with immediate effect	0

1) Position Instruction Source: Pulse Instruction (P13.00=0)

When selecting a pulse command, follow the following steps to obtain the correct pulse command form.

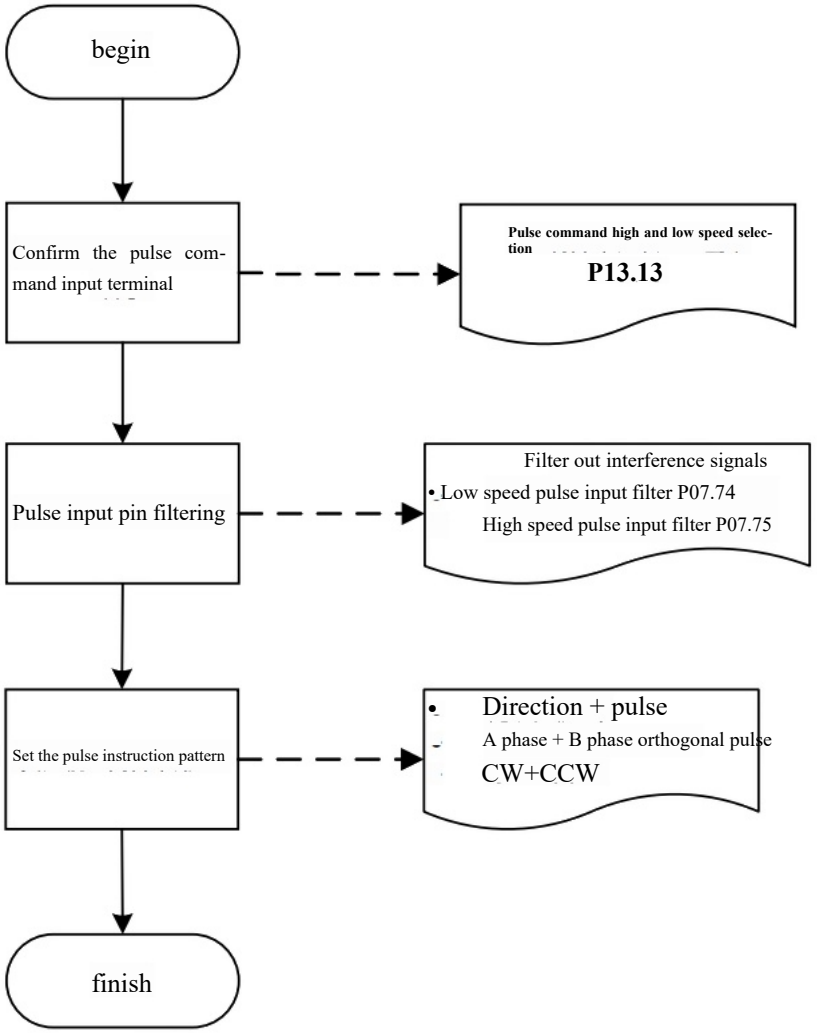

Figure 4-5 Pulse Instruction Source Setting Process

② Pulse instruction input terminal

The servo driver has two sets of pulse input terminals:

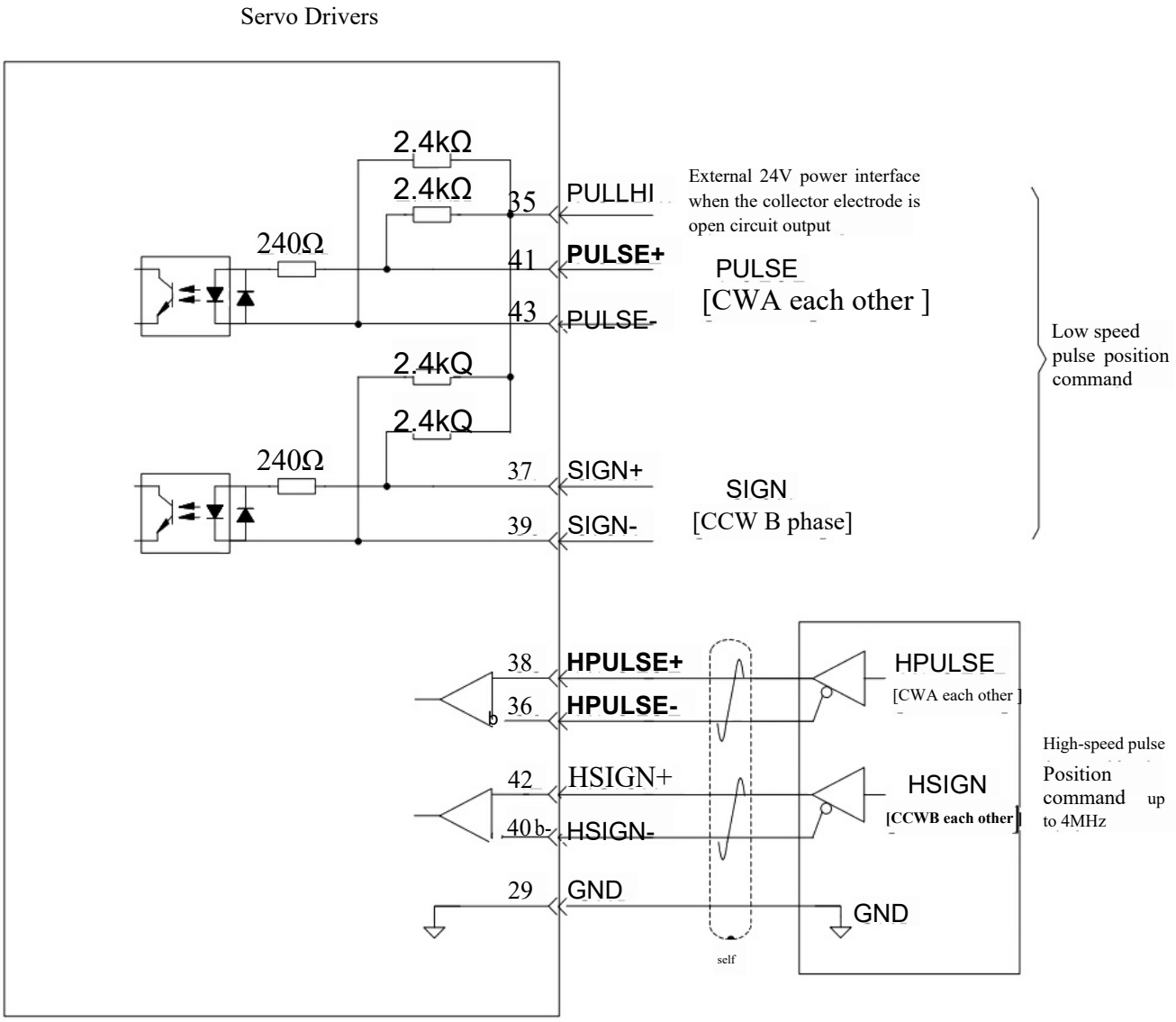

■ Low speed pulse input terminals (corresponding to PULSE+, PULSE-, SIGN+, SIGN-) Accept differential input (maximum input pulse frequency is 500kpps) and open collector input (maximum input pulse frequency is 200kpps).

■ High-speed pulse input terminals (corresponding to HPULSE+, HPULSE-, HSIGN+, HSIGN-) Only differential input is accepted (the maximum input pulse frequency is 4Mpps).

FC		name	Scope of the setting	function	Method of setting	entry-into-force time	Factory Settings
P13	13	Pulse instruction high and low speed selection	0-Low speed 1-High speed	Set the hardware input terminal of the pulse command.	Shut down Settings	with immediate effect	0

See Chapter 2 for a detailed description of the interface circuit.

Table 4-1 Pulse Input Specifications

Pulse specifications		Maximum input frequency	voltage specification	Forward current
High-speed pulse	Differential signal	4M	5V	<25mA
Low speed pulse	Differential signal	500k	5V	<15mA
	Cathode open circuit signal	200k	24V	<15mA

③ Pulse input pin filtering

The hardware input terminal of low-speed pulse or high-speed pulse needs to set a certain pin filter time to filter the input pulse command, so as to prevent interference signals from entering the servo driver and causing the motor to misoperate.

FC		name	Scope of the setting	unit	function	Methodology	entry-into-force time	Factory Settings
P07	74	Low speed pulse instruction filter	0~255	25ns	Set the filter time constant for low speed pulses.	Shut down Settings	Re-energizing	30
P07	75	High speed pulse instruction filter	0~255	25ns	Set the filter time constant for high speed pulse.	Shut down Settings	Re-energizing	3

If the pulse input pin filter time constant is tr and the minimum width of the input signal is tmin, the input signal and the filtered signal are shown in the figure below. In this case, the filtered signal will be delayed by tr compared to the input signal.

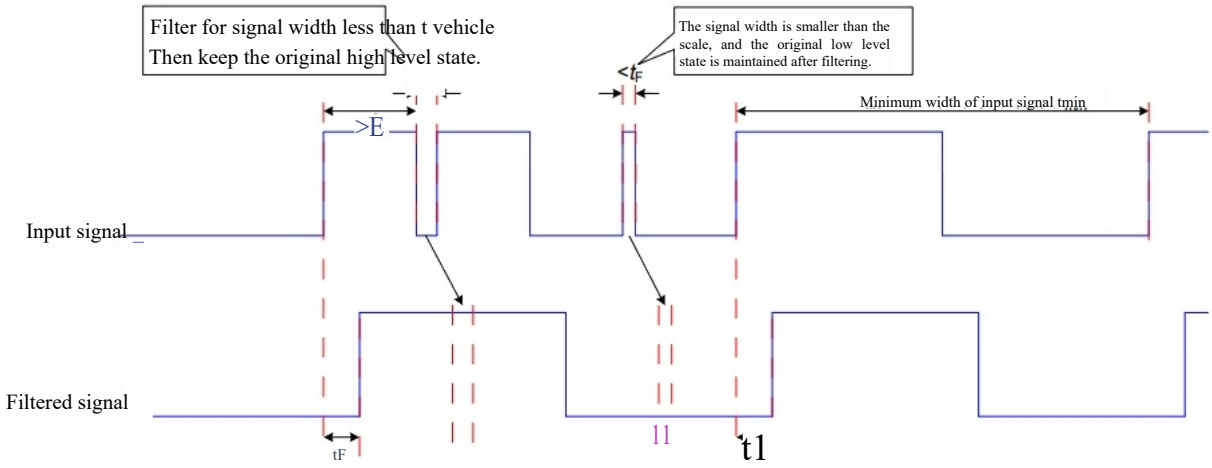

Figure 4-6 Filter Signal Waveform Example

Pulse input pin filter time tr should meet: te≤ (20%~25%) tmino

Given the maximum frequency (or minimum pulse width) of the input pulse, the recommended filter parameters are shown in the following table.

Table 4-2 Recommended Filter Parameters

Input pulse terminal	Corresponding function code	Maximum frequency of input pulse	Recommended filter parameters (unit: 25 ns)
Low speed pulse input terminal	P07.74	<167k	30
Low speed pulse input terminal	P07.74	167k~250k	20
Low speed pulse input terminal	P07.74	250k~500k	10
High speed pulse input terminal	P07.75	500k~1M	5
High speed pulse input terminal	P07.75	>1M	3

For example, if the set value is 30, the actual pulse input pin filtering time is 30*25=750ns.

④ Pulse command pattern

There are three forms of pulse commands that can be input to the servo driver:

- Direction + pulse (positive or negative logic)
- AB orthogonal, 4x frequency
- Positive pulse/negative pulse (CW+CCW)

Please set the pulse form according to the host computer or other pulse output device.

FC		name	Scope of the setting	function	Methodology	entry-into-force time	Factory Settings
P13	14	Pulse comm-and pattern	0-direction + pulse (positive logic) 1-direction+ pulse (negative logic) 2-A phase+B phase orthogonal pulse 4x frequency 3-CW+CCW	Select pulse instruction form	Shut down Settings	Re-energizing	0

Table 4-3 Pulse Morphology Description

P04.01 Direction of travel selection	P13.14 Directive form setting	Pulse shape	signal	Schematic diagram of forward pulse	Schematic diagram of reversal pulse
0	0	Pulse + positive direction logic	PULSE SIGN	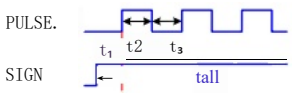	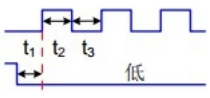
	1	Pulse + direction negative logic	PULSE SIGN	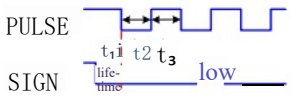	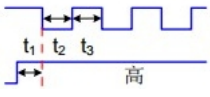
	2	A phase + B phase orthogonal pulse 4 times frequency	PULSE (A phase) SIGN (B each other)	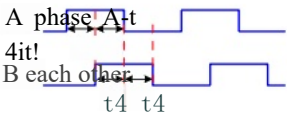 Phase A is 90° ahead of phase B	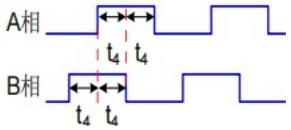 B phase is 90° ahead of A phase
	3	CW+CCW	PULSE (CW) SIGN (CCW)	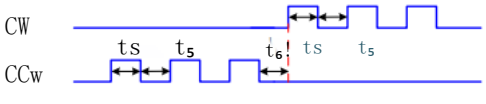 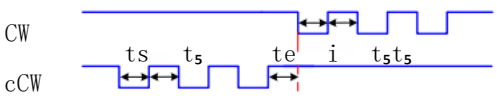	
1	0	Pulse + positive direction logic	PULSE SIGN	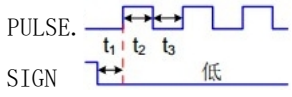	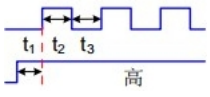
	1	Pulse + direction negative logic	PULSE SIGN	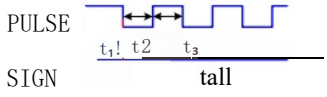	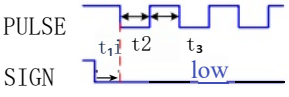

	2	A phase + B phase ortho-gonal pulse 4 times	PULSE (A phase) SIGN (B phase)	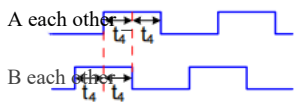 B phase is 90° ahead of A phase	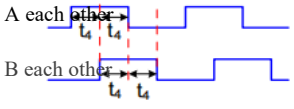 A phase superposition B phase 9 0 °
	3	CW+CCW	PULSE (CW) SIGN (CCW)	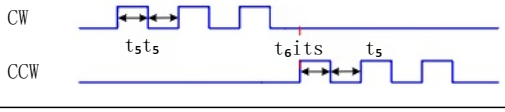	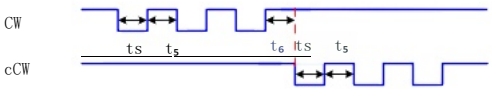

The maximum frequency and minimum time width specifications of the position pulse instructions corresponding to different input terminals are shown in the following table:

Table 4-4 Pulse Instruction Specifications

input terminal		maximun-frequency	Minimum time width/μs					
			t1	S2	t_3	t4	ts	t6
High speed pulse input terminal		4Mpps	0. 125	0. 125	0. 125	0. 25	0. 125	0. 125
Low speed pulse input terminal	differential input	500kpps	1	1	1	2	1	1
	Input at the collector electrode	200kpps	2. 5	2. 5	2. 5	5	2. 5	2. 5

The rising and falling time of the position pulse instruction should be less than 0.1μs.

⑤ Pulse command frequency

The maximum pulse input frequency of the position can be set by function code P08.05. If the actual input pulse frequency is greater than P08.05, warning E.424.0 (position command overspeed fault) will occur.

FC		name	Scope of the setting	unit	function	Method-ology	entry-into-force time	Factory Settings
P08	05	Maximum pulse input frequency at location	100~4000	kHz	Set the maximum frequency of external pulse commands.	Shut down Setti-ngs	Re-energizing	4000

The location instruction is derived from the preset location instruction (P13.00=1)

The servo drive is equipped with preset position operation functionality. It refers to the internal storage of 1 6 segment position commands within the servo drive, where each segment's position shift, maximum operating speed, and acceleration/deceleration time can be individually configured. The waiting time between segments and connection methods can also be selected according to practical needs. The configuration process is as follows:

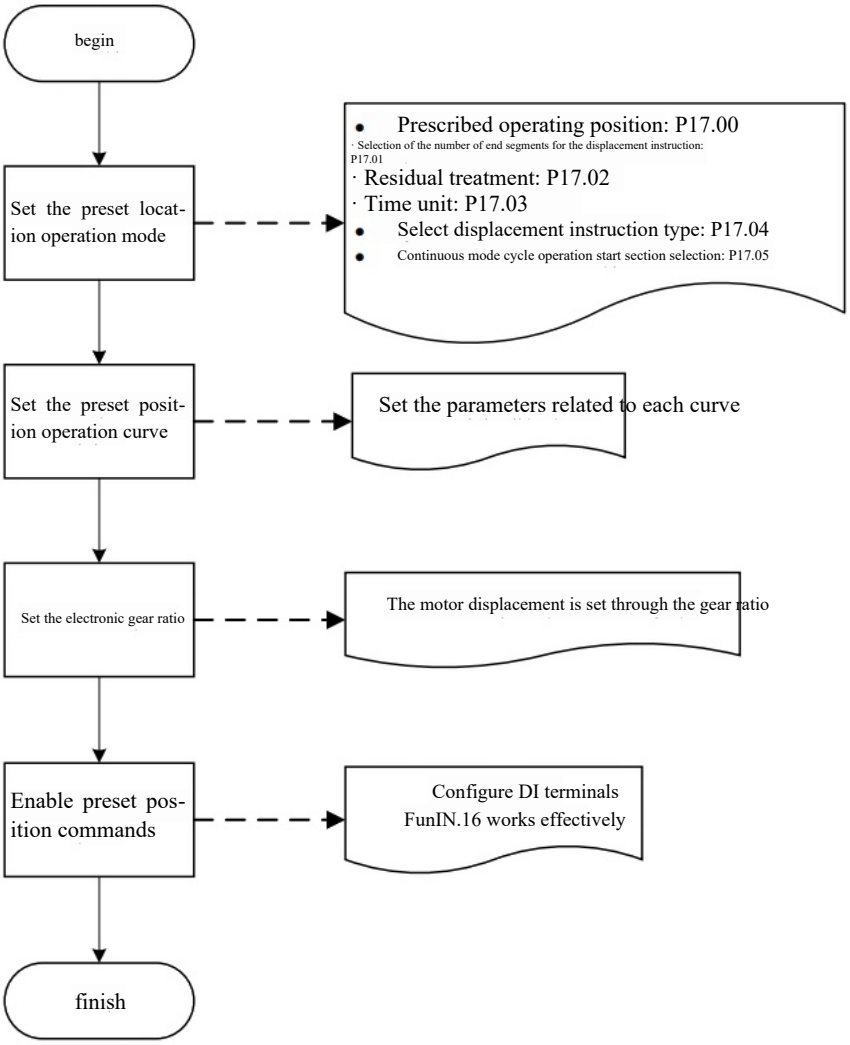

Figure 4-7 Shows the Preset Instruction Source and Preset Flow

① Set the preset position operation mode

FC		name	Scope of the setting	function	Meth-odology	entry-into-force time	Factory Settings
P17	00	Predefined location task opera-tion mode	0-single run 1-circulation opera-tion 2-DI switching operation 3-sequential operation	Set the way to connect between paragraphs	Shut down Settings	with immediate effect	1
P17	01	Positioning movement se-gment selection	1~16	The total number of preset position instructions	Shut down Settings	with immediate effect	1
P17	02	Post-processing	0-Continue running the unfinished segment 1-Restart running from the first segment	Set the servo enable ON and preset the starting number of the segment from the interrupted to the resumed operation pay attention to： P17.02 is only valid when P17.00=2.	Shut down Settings	with immediate effect	0
P17	03	Waiting time unit	0-ms 1-s	Set the acceleration and deceleration time and waiting time unit. Note: The wait time is only valid when P17.00=0 or 1.	Shut down Settings	with immediate effect	0
P17	04	Location ins-truction type selection	0-Relative displacement command 1-Absolute displacement command	Set position instruction type	Shut down Settings	with immediate effect	0
P17	05	Cycle mode start selection	0~16	P17.00=3 is the starting number of the multi-segment position run after the first round. pay attention to： P17.05=0 or P17.05> P17.01 means no circulation; P17. 05>1 The starting section number is P17.05 set value.	Shut down Settings	with immediate effect	0

■ Shut down after a single run (P17.00=0)

Table 4-5 Description of a Single Run

pattern description	operation curve
Run 1 round; Automatic switching of segment number increment; **Waiting time can be set between paragraphs;** The preset position instruction enables the signal to be level effective.	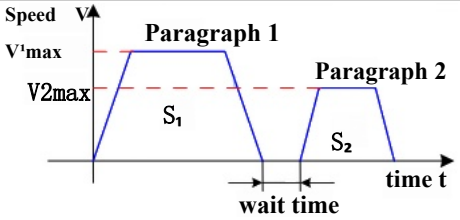 Vimax, V2max: maximum operating speed in the first paragraph and the second paragraph; **S1 and S2: Positioning is valid after completing the first and second segments respectively. When each segment completes, the positioning completion signal becomes active. During operation, preset position commands remain disabled. If the servo deactivates its position command for an incomplete segment, it will abandon the segment and stop. The positioning completion signal becomes active after stopping. Re-enable preset position commands to activate the servo, which then selects corresponding segments for operation according to P17.02 settings. If the servo deactivates during a segment's operation, the motor stops via the servo-off mechanism. The positioning completion signal becomes invalid after stopping. During segment operation, switching direction commands (FunIN.21) does not affect the segment's operational direction.**

The driver is fully operational for one complete cycle of the preset position instructions set by P17.00. The total number of cycles is called completing one run. Loop operation (P17.00=1)

Table 4-6 Circulation Operation Description

pattern description	operation curve
Running in a cycle, each round starts with the number 1; **Automatic switching of segment number increment;** **Waiting time can be set between paragraphs;** FunIN. 16 (Preset Position Enable) is valid and keeps the cycle running. The Preset Position command enable signal is valid at a level.	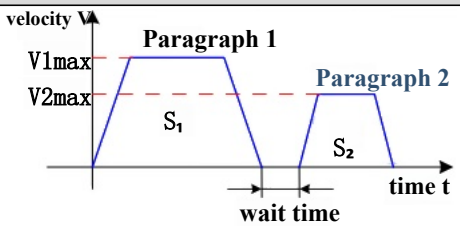 Vimax, V2max: maximum operating speed in the first paragraph and the second paragraph; **S1 and S2: Positioning is triggered when the first and second segments respectively complete their displacement. Each segment's positioning signal remains valid until termination. During operation, preset position commands remain disabled. The servo immediately aborts the segment's displacement and halts the machine, with positioning signals reactivated post-halt. Multiple segments can be re-enabled simultaneously. The servo selects operational segments based on P17.02 settings. If a segment's servo becomes disabled during operation, the motor halts via standard shutdown protocol, with positioning signals invalidated post-halt. Directional switching of position commands (DI, FunIN.21) during segment operation does not affect the segment's direction.**

■ DI switch operation (P17.00=2)

Table 4-7 DI Switching Operation Instructions

pattern description	operation curve
When running the current section number, you can set the next running section number. After completing the position command of the current section number, the motor will stop. After presetting the position command enables to be reset to ON, run the section number command at this time; The segment number is determined by the logic of the DI terminal; There is no waiting time between each paragraph, and the interval time is determined by the instruction delay of the host computer; The preset position command enables signal is valid for a transition.	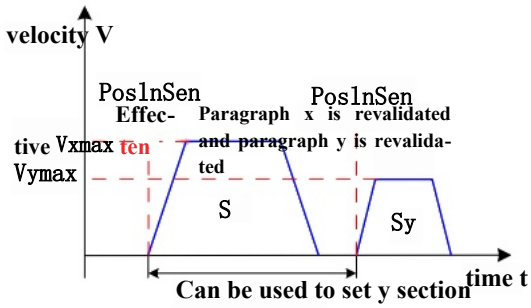 Vxmax and Vymax: maximum operating speed of the xth segment and yth segment; **Sx, Sy: displacement of the x-th and y-th paragraphs;** **The positioning completion signal is valid after each run is completed** During operation, the preset position command is enabled OFF, and the servo continues to perform the unfinished displacement of this section and outputs the positioning completion signal **The sequence of paragraph switching must be as follows:** ① The section number switching is invalid before the section displacement of the xth degree is completed; ② During the operation of the x-th segment displacement or after the positioning is completed, first enable OFF the preset position command, and then switch the segment number from x to y (if x=y, the servo will execute the x-th segment displacement again); ③ After the displacement positioning of the xth segment is completed, the preset position command enable is set to ON, and the servo driver performs the yth segment displacement. **During a run, the servo enable is OFF, and the motor stops according to the servo OFF stop mode. After the stop, the positioning is invalid;** **During a run, the position instruction direction changes DI** **(FunIN. 21) Logical switching has no effect on the running direction of this section.**

When the preset position operation mode is set to DI switching operation, configure the four DI terminals of the servo driver to function 27~30 (FunIN. 27: preset instruction selection 1~FunIN. 30: preset instruction selection 4), and determine the valid logic of the DI terminals.

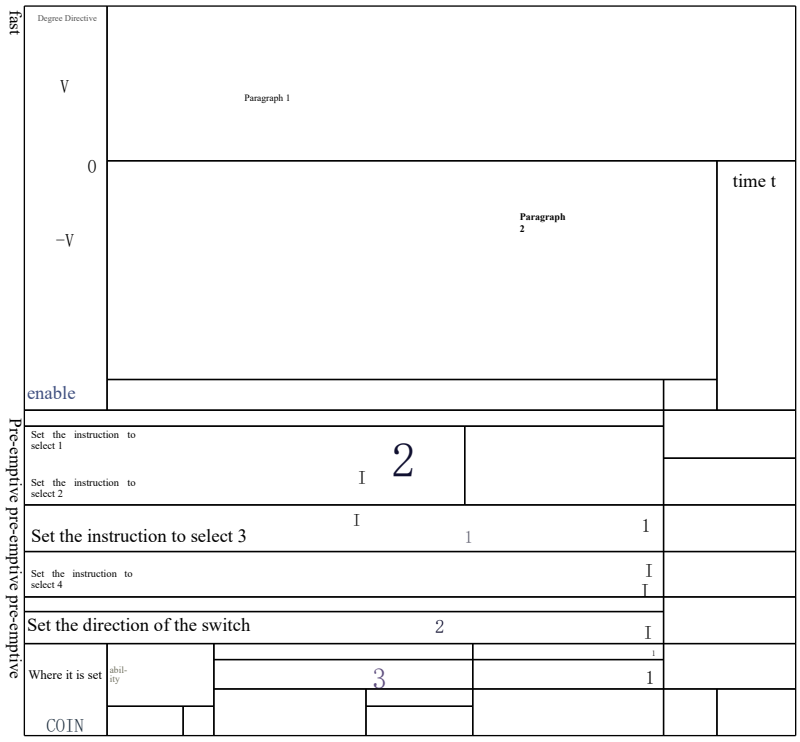

Figure 4-8 Preset Position Timing Diagram

pay attention to：

*1: The area that can be used to switch the section number: the position command of the previous section has been sent, and the preset position enable of the next section can become valid again .

*2: When using DI terminal, keep it valid for at least 3ms.

encoding	function name	function
FunIN.27	Predefined instruction selection 1	The preset segment number is a 4-bit binary number, and the preset instruction selection 1 to preset instruction selection 4 are as follows: The correspondence of numbers
FunIN.28	Predefined instruction selection 2	
FunIN.29	Predefined instruction selection 3	
FunIN.30	Predefined instruction selection 4	

Predefined instruction selection 4	Predefined instruction selection 3	Predefined instruction selection 2	Predefined instruction selection 1	segment number
0	0	0	0	1
0	0	0	1	2
...				
1	1	1	1	16

The DI terminal logic is level effective. When the input level is valid, the preset instruction selection value is 1. Otherwise it is 0.

■ Sequential operation (P17.00=3)

Table 4-8 Sequence Operation Instructions

pattern description	operation curve
It can run for one round and then stop (P17.05=0 or P17.05>P17.01); it can run in a cycle, and the starting segment number after the first round is P17.05; the segment number automatically increases and switches; **No waiting time between paragraphs;** **The preset position enables the signal to be level effective;**	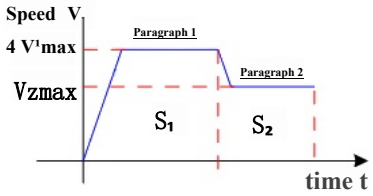 **Vimax, Vzmax: maximum operating speed in the first and second paragraphs;** **S1 and S2: Positioning is valid after completing the first and second segments respectively. When a segment completes, its positioning signal becomes valid. If the preset position command is disabled during a segment's operation, the servo abandons the segment's incomplete displacement and halts the machine. The positioning signal remains valid after stopping. Re-enable the preset position command to resume operation, with the servo selecting the corresponding segment based on P17.02 settings. If the servo becomes disabled during a segment's operation, the motor halts according to the servo-off shutdown protocol. The positioning signal becomes invalid after stopping. During a segment's operation, switching the direction command DI (FunIN.21) does not affect the segment's operational direction.**

② Set the preset position operation curve

The preset position operation function can set 16 different position instructions, and the displacement, maximum running speed, acceleration and deceleration time and waiting time between each section can be set respectively. Taking the first section as an example:

FC		name	Scope of the setting	unit	function	Meth-odology	entry-into-force time	Factory Settings
P17	12	Paragraph 1. Movement	−1073741824 ~1073741824	Direct-ive unit	Set the sum of position instructions in paragraph 1	Operat-ing Sett-ings	with immediate effect	10000
P17	14	The first paragr-aph displacement runs at a speed	1~6000	rpm	Set the maximum operating speed of paragraph 1	Operat-ing Sett-ings	with immediate effect	200
P17	15	Paragraph 1 displa-cement acceleration and deceleration time	0~65535	ms(s)	Set the time of the first motor segment to Orpm from variable speed to 1000rpm.	Operat-ing Sett-ings	with immediate effect	10
P17	16	Time to wait after the first stage of displace-ment	0~10000	ms(s)	Set the waiting time after the positioning of paragraph 1 is complete	Operat-ing Sett-ings	with immediate effect	10

According to the above setting, the actual operating curve of the motor is shown in the figure below:

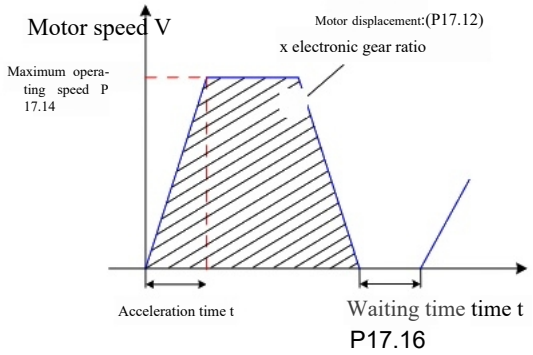

Figure 4-9 Motor Operating Curve in the First Paragraph

Therefore, the actual time t to accelerate to P17.14 (the first segment displacement velocity) is:

$$t = \frac{(P17.14)}{1000} \times (P17.15)$$

The remaining 15 paragraphs of parameters are set as shown in Chapter 7.

③ Enable preset instructions

When selecting a preset position as the source of the position command, select 3 as the position command source and configure one DI terminal of the servo driver to function 16.

Table 4-9 (FunIN. 16: Preset Position Enable) and Determine the Valid Logic for the DI Terminal

encoding	function name	function
FunIN. 16	Preset position enabled	**Effectively, the servo motor runs multiple position commands;** **Invalid, the servo motor is in a locked state;** **pay attention to：** **P17.00=0, 1, 3, the logic of the DI terminal corresponding to the preset position enable signal is valid at a level;** **P17.00=2, the preset position enable signal corresponds to the DI terminal logic as level effective and edge effective.**

2. Positioning, Directive and Setting

The direction of the position command can be switched through the DI terminal to change the motor's direction of operation. Configure one DI terminal of the servo driver as Function 2 1 .

Table 4-10 (FunIN. 21: Directional Switching of Position Instructions) and Determine the Valid Logic of DI Terminals

encoding	function name	function
FunIN. 21	Location instruction direction switch	Invalid, the actual position instruction direction is the same as the set position instruction direction; Effective, the actual position instruction direction is opposite to the set position instruction direction;

The actual motor running direction is related to three factors: motor running direction selection (P04.01), positive/negative position command, and direction switching of position command (FunIN.21)

close 。

Table 4-11 Motor Running Direction Table

P4. 01	Positive and negative position commands	FunIN21	Actual motor running direction
0	+	of no av-ail	anticlockwise
0	+	valid	clockwise
0	–	of no av-ail	clockwise
0	–	valid	anticlockwise
1	+	of no av-ail	clockwise
1	+	valid	anticlockwise
1		of no av-ail	anticlockwise
1		valid	clockwise

3. Directive Prohibited Functions

Function disable command: that is, all position commands are forcibly set to zero, the servo driver does not respond to any internal or external position commands, position control

In the mode, the motor is in the servo locked state. At this time, the driver can switch to other control modes to continue running.

When using the disable function, configure one DI terminal of the servo driver to Function 3 and determine the valid logic of the DI terminal.

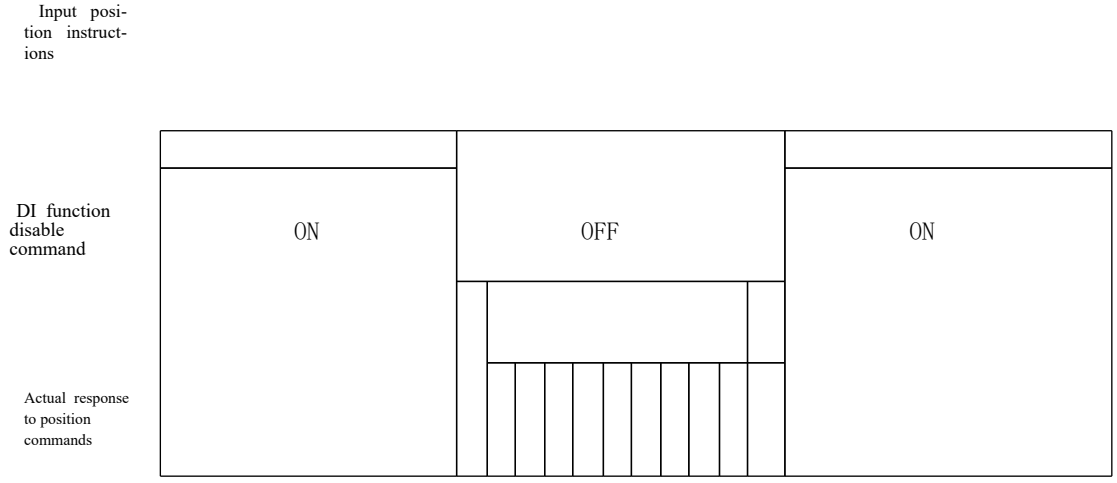

Figure 4-10 Examples of Command Prohibited Functional Waveforms

encoding	function name	function
FunIN. 3	Inadmissibility of instructions	**Invalid, the servo driver can respond to the command;** **Effectively, the servo driver does not respond to any internal or external position commands;**

4.2.1.2 Location Directive Filter

Position command filtering is the filtering of position commands (encoder units) after electronic gear division or frequency multiplication. It includes FIR filtering and mean filtering.

Location instruction filtering should be considered in the following situations:

- The position command output by the host computer is not processed for acceleration and deceleration;
- Low pulse command frequency;
- When the gear ratio is more than 10 times.

FC		name	Scope of the setting	unit	function	Methodology	entry-into-force time	Factory Settings
P07	00	Location FIR filter	0~6553.5	ms	Set the time constant of the FIR filter for the position command (encoder unit)	Shut down Settings	with immediate effect	0.0
P07	01	Location instruction mean filter	0~128.0	ms	Set the time constant of the average filter for the position command (encoder unit)	Shut down Settings	with immediate effect	0.0

This function has no effect on the displacement (total number of position commands).

If the set value is too large, the response delay will increase. The filter time constant should be set according to the actual situation.

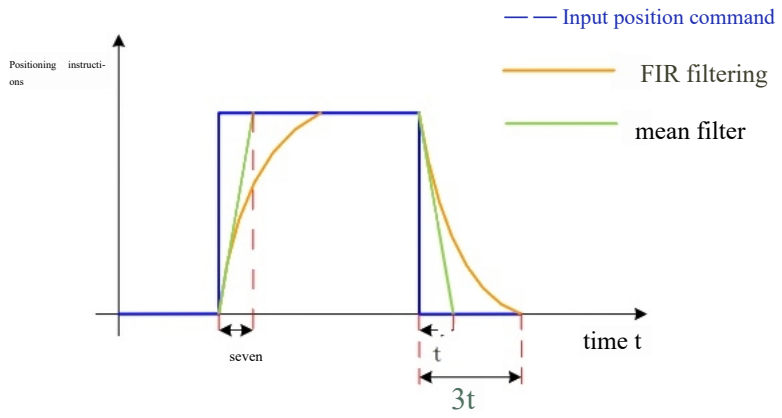

Figure 4-11 Schematic Diagram of Rectangular Position Instruction, First-Order Filter and Average Filter

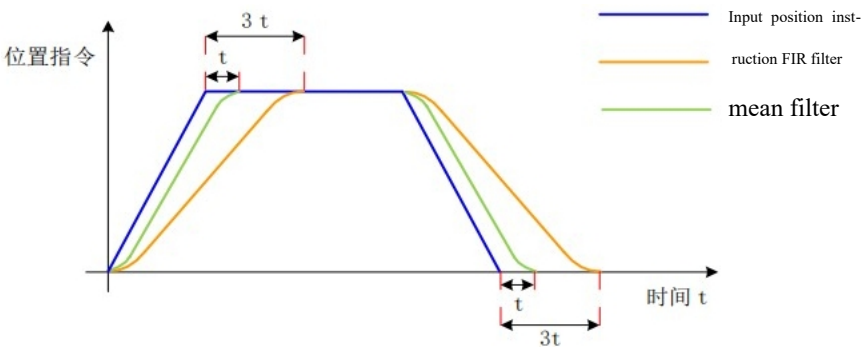

Figure 4-12 Schematic Diagram of Trapezoidal Position Instruction, First-Order Filter and Average Filter

4.2.1.3 Location Bias Clearance

Position deviation = (position instruction-position feedback) (encoder unit)

Position deviation clearance function refers to the driver that can clear the position deviation when certain conditions are met (P08.06).

FC		name	Scope of the setting	function	Meth-odology	entry-into-force time	Factory Settings
P08	08	Location bias removal method	0-Servo is cleared when NOT RUN 1-Servo OFF or DI signal is valid	Set the conditions for removing positional deviations	Shut down Settings	with immedi-ate effect	0

P08.08=1 When, one DI terminal of the servo driver should be configured as function 4 (FunIN.4:ClrPosPRr, position deviation clearance), and the valid logic of the DI terminal should be determined.

code	function name	function
FunIN. 4	Location bias clearance	Effective, zero position deviation; Invalid, no cleanup operation is performed.

The setting method is as follows:

Table 4-12 Position Deviation Clearance Settings

set value	reset condition	cleanout time
P08. 08=0	When the servo status is not "run", the position deviation is cleared.	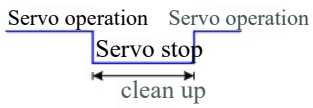
P08. 08=1	When the servo OFF or clear position deviation DI terminal is logically valid, the position deviation is cleared.	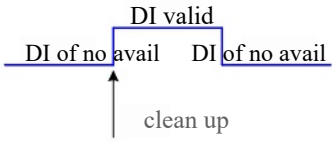 (Valid on the rising edge)
		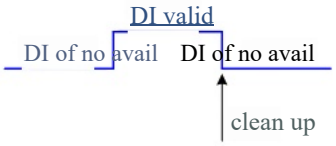 (Downward along the effective)

4.2.1.4 Positioning Complete Signal/positioning Approach Signal

The positioning completion function refers to the condition where the position tracking deviation meets the user-set criteria (P13.08), indicating the end of positioning in the position control mode. At this point, the servo driver can output a position arrival (Coin) signal. The host computer receiving this signal confirms the successful positioning of the servo driver.

The functional principle is shown in the following figure:

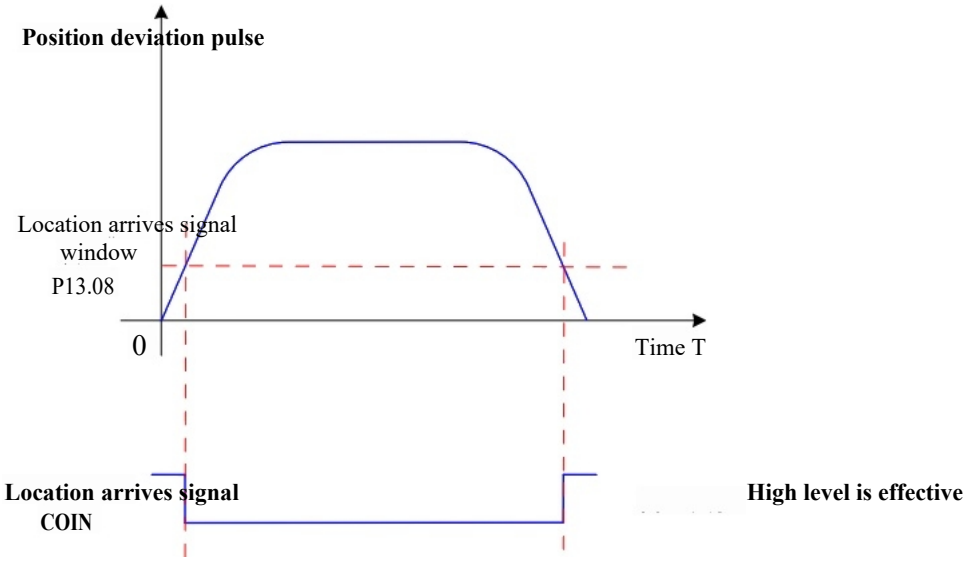

Figure 4-13 Illustrates the Positioning Function

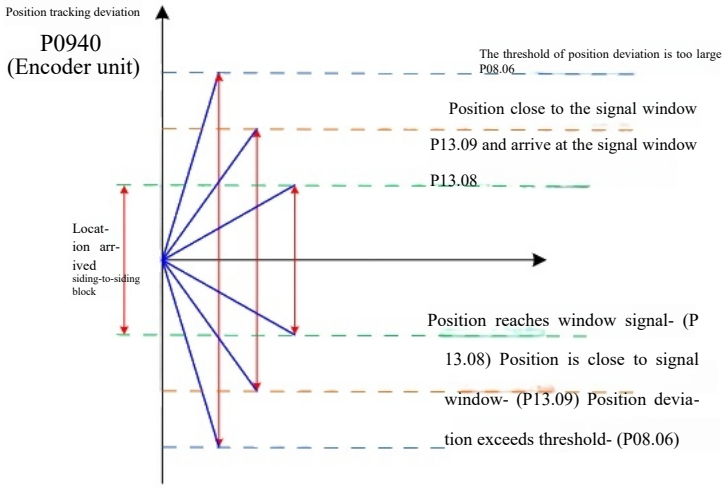

Figure 4-14 Position Deviation Correlation Signal

When the position deviation meets the condition (P13.09), the servo driver can also output the positioning close signal (FunOut.10). Usually, the host computer can receive the positioning close signal before confirming the arrival of the position, so as to prepare for the completion of the positioning operation.

Before using the positioning complete/close function, the output conditions, thresholds, window and hold time of position arrival/position close should be set. The principle of position arrival window time and hold time is shown in the following figure:

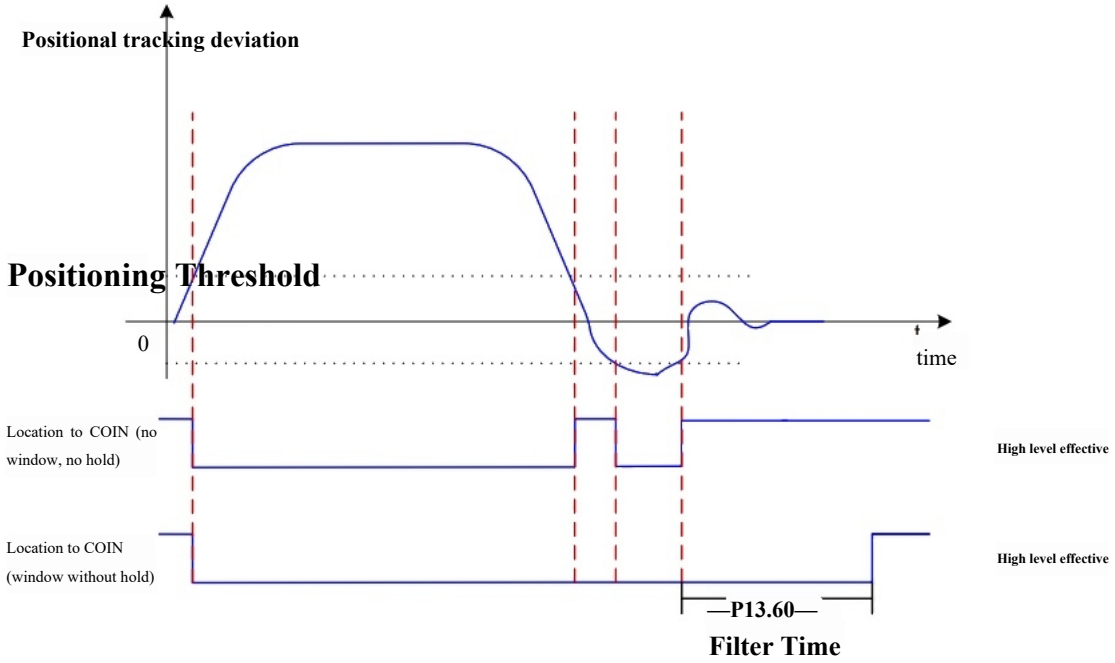

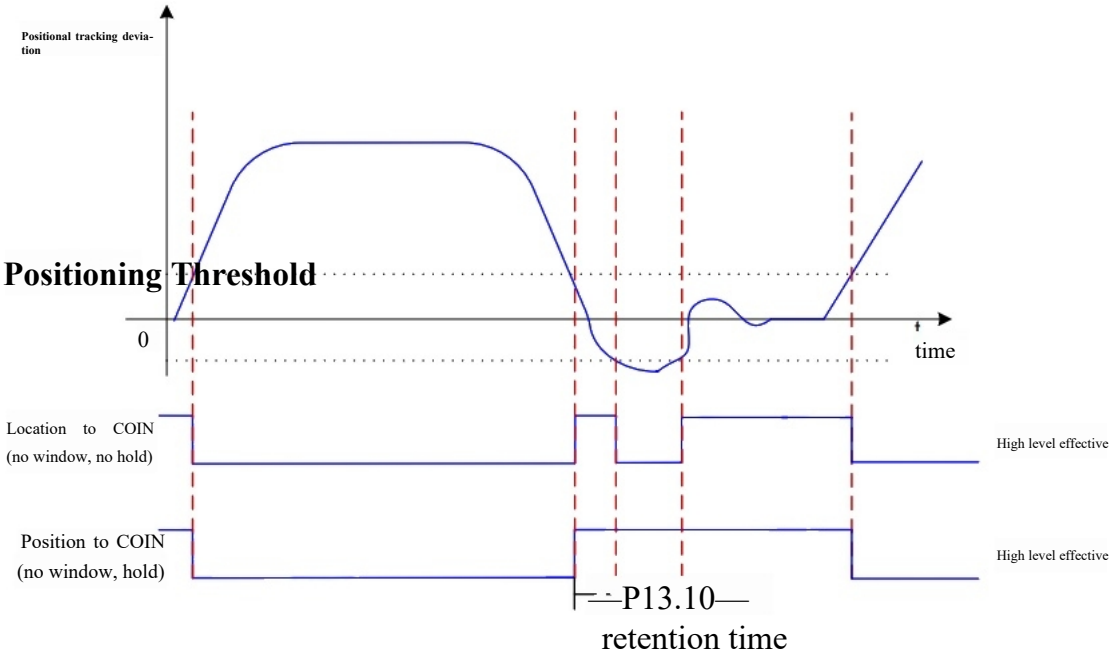

When the positioning is completed and the output selection has a holding function, its set value is 0 to indicate that the positioning completion signal is one until the next positioning instruction is received.

Remains effective.

FC		name	Scope of the setting	unit	function	Methodology	entry-into-force time	Factory Settings
P13	07	Position reaches signal output condition	0-The absolute value of the position deviation is less than P 13.08 output 1-The absolute value of the position deviation is less than P13.08, and the output is 2 when the filtered position command is 0-the absolute value of the position deviation is less than		Set the conditions for effective COIN/ NEAR positioning	Operating Settings	with immediate effect	0

			P13.08, and the position command is output when it is 0 before filtering 3-The absolute value of the position deviation is less than When P13.08 is set and the position command is 0 before filtering, the setting time of P 13.10 shall remain valid at least					
P13	08	Position the signal window	1~65535	Encoder unit	Setting the threshold for the absolute value of the position deviation when COIN is valid	Operating Settings	with immediate effect	7
P13	09	Position the close signal window	1~65535	Encoder unit	Setting the threshold of absolute value of position deviation when NEAR is effective	Operating Settings	with immediate effect	65535
P13	10	Position arrival signal hold time	0-30000	ms	The maximum time the positioning signal is effective	Operating Settings	with immediate effect	0
P13	60	Positioning filter time	0-30000	ms	Position signal filter time, filter output effective level	Operating Settings	with immediate effect	0



The positioning close signal window (P13.09) is generally required to be greater than the position arrival signal window (P13.08).

Position arrival signal window (P13.08) only reflects the absolute threshold of position deviation when positioning is completed and effective, and has nothing to do with positioning accuracy.

Speed feedforward gain (P06.08) If the set value is too high or low speed operation, the absolute value of position deviation will be small. If P13.08 set value is too high, the positioning completion will always be effective. Therefore, in order to improve the effectiveness of positioning completion, please reduce the set value of P13.08.

- When the position arrival signal window (P13.08) is small and the position deviation is also small, the output conditions of the positioning completion signal can be changed by setting P13.07.
- When the servo enable is invalid, the positioning complete signal (COIN) and the positioning near signal (NEAR) are output invalid.

When using positioning to complete and positioning close functions, the two DO terminals of the servo driver should be configured as DO Function 10 (FunOUT. 10: NEAR, positioning close) and DO function 11 (FunOUT.11: COIN, position arrival) and determine the corresponding DO terminal valid logic.

code	name	function name	function
FunOut.10	NEAR	Location close	Effectively, under the position control mode, the absolute value of position deviation meets the P13.09 setting condition, indicating that the servo positioning is close. Invalid, in position control mode, the servo is in the process of positioning close.
FunOut.11	COIN	Location reached	Effectively, under the position control mode, the absolute value of position deviation meets the P13.08 setting condition, indicating that the servo position has arrived. Invalid, position control mode, the servo is in the process of positioning completion.

4.2.1.5 Returnee

1. Function Introduction

■ Zero return function refers to the function of mechanical origin positioning by servo driver according to external signal given action speed.

■ After zero return, the actual position feedback of the motor is P13.51 (origin mechanical offset);

■ The mechanical origin can correspond to the origin switch signal, forward and reverse limit switch, motor Z signal;

■ There are many mechanical zeroing methods. If the mechanical connection between the motor and the equipment cannot be disconnected in actual use, please refer to the original point return mode introduction in this chapter to select the appropriate zeroing method to avoid damaging the equipment.

■ The servo is in the return to zero mode and cannot be switched to other modes while running; it can be switched to other modes when the return to zero is completed or interrupted (fault or invalid enable);

■ Please pay attention to the distance between the limit switch and the forward and reverse limit switch, which should not be too close, and the appropriate acceleration must be set, otherwise it may lead to collision!

2. Parameter Setting

1) Origin return mode setting

FC		name	Scope of the setting	function	Meth-odology	entry-into-force time	Factory Settings
P13	44	Back to Origin enabled	0-Disable the origin return function -Enable the origin reset function through DI 2-Reset the origin immediately 3-Take the current position as the origin	Set the origin reset mode and trigger signal source	Operating Settings	with immediate effect	0
P13	45	Origin restoration mode	(1) -Reverse return to zero, the deceleration point is the mechanical limit position, and the origin is the motor Z signal. Before encountering the Z signal, it must first encounter the mechanical limit position (2) -Positive reset: The deceleration point is the mechanical limit position, and the origin is the motor's Z signal. The Z signal must first encounter the mechanical limit position before triggering this process. 1-Reverse reset: The deceleration point is the reverse limit switch, and the origin is the motor's Z signal. The Z signal must first encounter the descending edge of the reverse limit switch before triggering this process. 2-Positive reset: The deceleration point is the positive limit switch, and the origin is the motor's Z signal. The Z signal must first encounter the descending edge of the positive limit switch before triggering this process. 3-Positive reset: The deceleration point is the origin switch, and the origin is the motor's Z signal. The Z signal must first encounter the descending edge on the same side as the origin switch before triggering this process.	Set the return direction, deceleration point and origin when setting the origin back to zero	Shut down Settings	with immediate effect	1

FC		name	Scope of the setting	function	Meth- odology	entry-into- force time	Factory Settings
			4. Positive reset: The deceleration point is the origin switch, and the origin is the motor Z signal. Before encountering the Z signal, it must first meet the rising edge on the same side as the origin switch. 5. Reverse reset: The deceleration point is the origin switch, and the origin is the motor Z signal. Before encountering the Z signal, it must first meet the falling edge on the same side as the origin switch. 6. Reverse reset: The deceleration point is the origin switch, and the origin is the motor Z signal. Before encountering the Z signal, it must first meet the rising edge on the same side as the origin switch. 7. Positive reset: The deceleration point is the origin switch, and the origin is the motor Z signal. Before encountering the Z signal, it must first meet the falling edge on the same side as the origin switch. 8. Positive reset: The deceleration point is the origin switch, and the origin is the motor Z signal. Before encountering the Z signal, it must first meet the rising edge on the same side as the origin switch. 9. Positive reset: The deceleration point is the origin switch, and the origin is the motor Z signal. Before encountering the Z signal, it must first meet the rising edge on the opposite side of the origin switch. 10. Positive reset: The deceleration point is the origin switch, and the origin is the motor Z signal. Before encountering the Z signal, it must first meet the falling edge on the opposite side of the origin switch. 11. Reverse reset: The deceleration point is the origin switch, and the origin is the motor Z signal. Before encountering the Z signal, it must first meet the falling edge on the same side of the origin switch. 12. Reverse reset: The deceleration point is the origin switch, and the origin is the motor Z signal. Before encountering the Z signal, it must first meet the rising edge on the same side of the origin switch. 13. Reverse reset: The deceleration point is the origin switch, and the origin is the motor Z signal on the opposite side. Before encountering the Z signal, it must first meet the rising edge on the opposite side of the origin switch. 14. Positive reset: The deceleration point is the origin switch. The origin is the Z signal of the motor on the other side of the origin switch. Before encountering the Z signal, the falling edge of the other side of the origin switch must be encountered first **15~16-Retention 17~32-Similar to 1~14, but the deceleration point coincides with the origin 33-Reverse back to zero, the origin is the motor Z signal** **34-Positive return to zero, the origin is the motor Z signal 35-with the current position as the origin**				

2) Origin Return Operation Curve Setting

If the deceleration point signal becomes active before sufficient deceleration is achieved, it may result in unstable final positioning. Careful consideration of the required displacement for deceleration should be given when setting the positions for both deceleration points and origin signals. The acceleration/deceleration values (P13.48) during origin detection also significantly impact positioning stability, and these factors should be carefully considered during configuration.

FC		name	Scope of the setting	unit	function	Meth-odology	entry-into-force time	Factory Settings
P13	46	Original point high-speed search speed	0~3000	rpm	When the origin is set to zero, the high speed value of the search deceleration point signal is obtained.	Shut down Settings	with immediate effect	100
P13	47	Low speed search at the origin	0~1000	rpm	Set the zero point to the low speed value when searching for the origin. The speed setting should be low enough to prevent mechanical shock caused by shutdown.	Shut down Settings	with immediate effect	10
P13	48	Back to the origin with acceleration and deceleration	0~1000	rpm/s	Set the origin to return to the acceleration of the motor from 0 to 1000rpm uniformly.	Shut down Settings	with immediate effect	1000
P13	49	Source point find time	0~655.35	S	Limit the total time to return to the origin, and a warning occurs if the timeout occurs. A.425.0 (failure to return to zero).	Shut down Settings	with immediate effect	500.00
P13	51	Origin mechanical offset	-1073741824 ~1073741824	Direct-ive unit	Set the absolute position of the motor (P09.49) after the origin reset.	Shut down Settings	with immediate effect	0

code	function name	function
FunIN.11	Origin switch	Effective, the current position is the origin; HomeSwitch's DI terminal logic / Actual effective level 0 (low level) / low level 1 (high level) / high level According to the output of the host computer, the DI terminal corresponding to the origin switch should be logically set as high/low level effective.
FunIN.12	Zeroing enabled	Effectively enables the return to the origin function, and repeatedly enabling is invalid during the return to the origin operation; Invalid, disable the origin reset function.
FunOut.14	Zero return completed	Effectively, when the position control is completed, the origin returns to zero. Invalid, origin back to zero not completed.

3) **Enable Reset Setting**

①P13.44=0

■ **Turn off the origin reset function ② P13. 44 = 1**

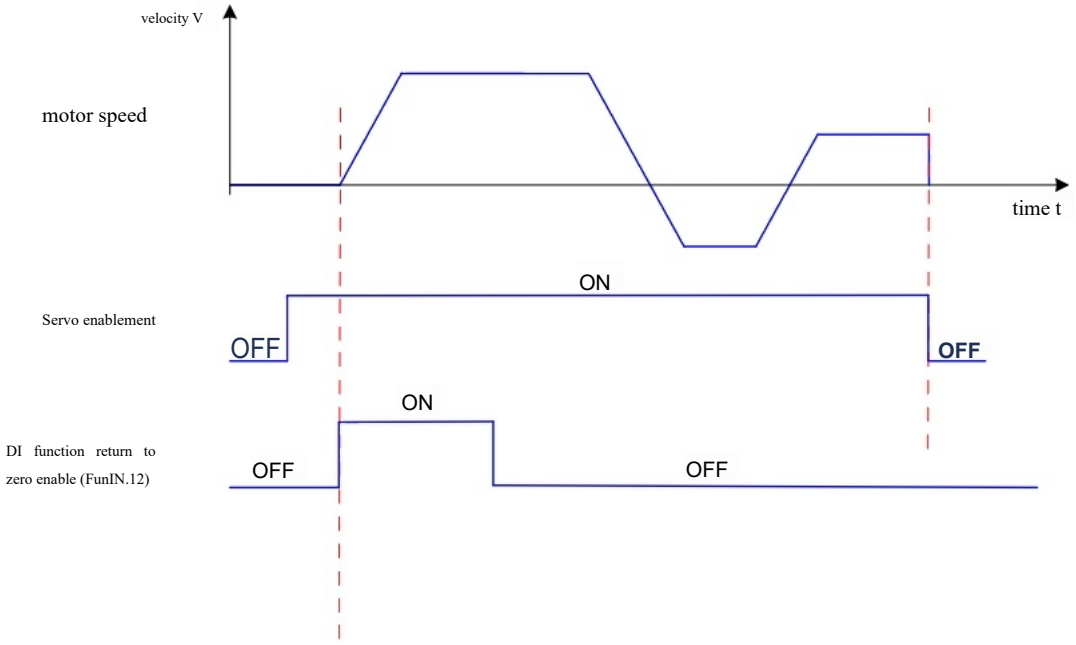

Figure 4-15 Is an Example of a Timing Diagram

■ The servo enable signal must be opened first, and then the return to zero enable signal;

■ During the return to origin, the servo enable signal remains valid and the change of HomingStart signal is shielded;

■ During the process of returning to the origin, the servo enable signal is invalid and the servo motor stops rotating. To restart the return to the origin, please first open the servo enable signal and then open the HomingStart signal;

■ An origin reset failure (A.425.0) occurs, the servo motor stops rotating, the servo enable signal remains valid, and the HomingStart signal is retriggered Effective, can be reset A.425.0, and re-execute the original point return;
Can be repeatedly triggered to return to the origin;

③ P13.44=2

After power on, set the servo enable signal to valid, and immediately return to the origin;

During the process of returning to the origin, the servo enable signal is invalid, the servo motor stops rotating, and the servo enable signal is re-enabled to trigger the return to the origin again;

■ An origin reset failure (A.425.0) occurs, P13.44 is set to 0, the servo motor stops rotating, and the servo enable signal is set to invalid to reset A.425.0; After the return to origin is completed, P13.44=0; To reconfigure the return to origin, you must reset P13.44;

4) Introduction to the origin return mode

I) Method 1:

Table 4-13 Origin Reset Mode 1

Motion frame diagram	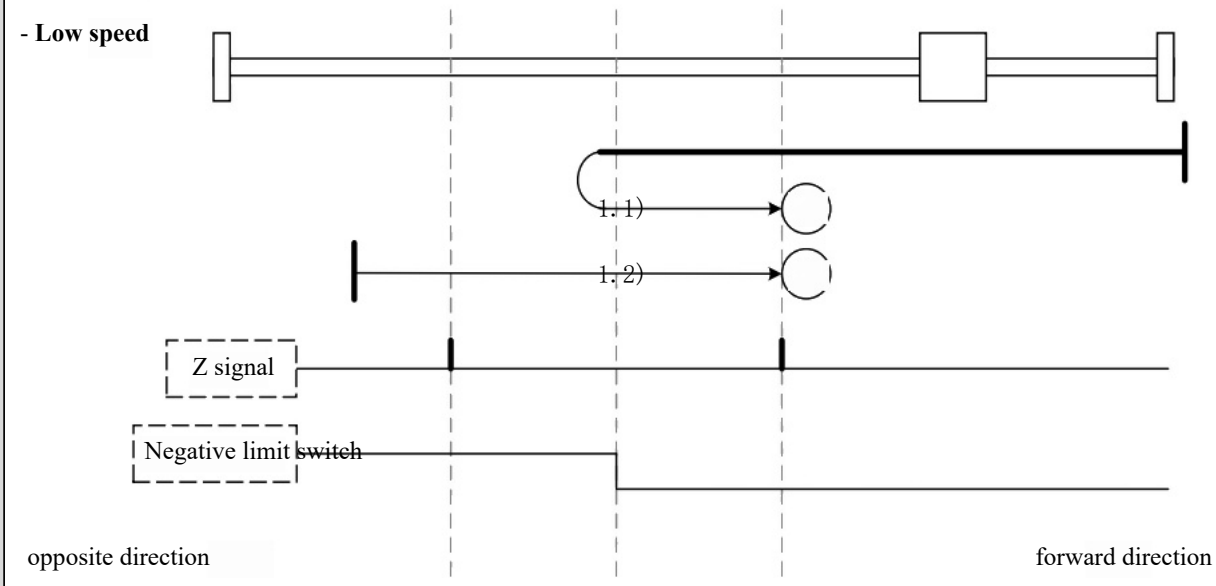

framing signal	origin	The deceleration point
	Z believed number	Negative limit switch

Method 1	Action description	
	Note: Different initial conditions, different actions	
	initial condition	Reset action
	1. 1-Zero time deceleration point is invalid	When starting back to zero, it runs at high speed in reverse. When the rising edge of the reverse limit signal is encountered, it runs at low speed in forward. When the first Z signal after the falling edge of the reverse limit signal is encountered, it stops.
	1.2-Zero deceleration point is valid	Start back to zero directly at the start of the positive low speed back to zero. Stop after the first Z signal after the falling edge of the reverse limit signal

II) Method 2:

Table 4-14 Origin Reset Mode 2

<table>
<tr><td>Motion frame diagram</td><td colspan="3">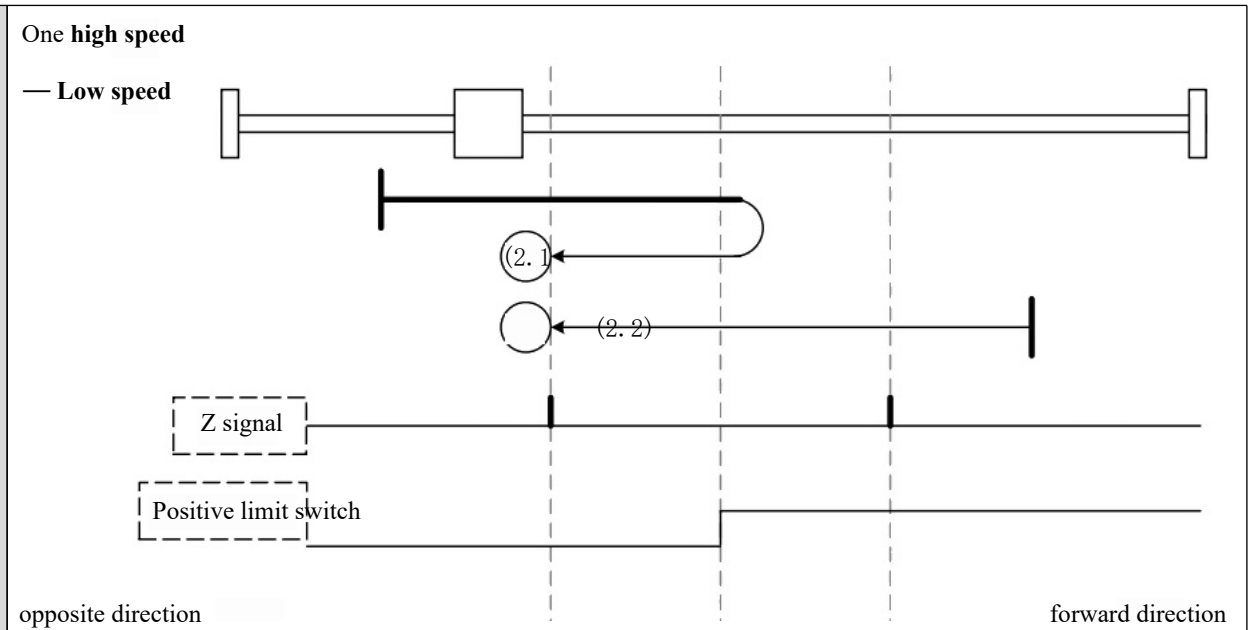
</td></tr>
<tr><td rowspan="2">framing signal</td><td>origin</td><td colspan="2">The deceleration point</td></tr>
<tr><td>Z believed number</td><td colspan="2">Positive limit switch</td></tr>
<tr><td rowspan="4">Method 2</td><td colspan="3">Action description</td></tr>
<tr><td colspan="3">Note: Different initial conditions, different actions</td></tr>
<tr><td>initial condition</td><td colspan="2">Reset action</td></tr>
<tr><td>2. 1-Zero time deceleration point is invalid</td><td colspan="2">When starting back to zero, it is running at high speed in the forward direction. After encountering the rising edge of the forward limit signal, it runs in reverse low speed and stops after encountering the first Z signal after the falling edge of the forward limit signal</td></tr>
<tr><td>2.2-Zero deceleration point is valid</td><td colspan="2">Start back to zero directly and start reverse low speed back to zero. Stop when the first Z signal is encountered after the falling edge of the forward limit signal</td></tr>
</table>

III) Method 3-4:

Table 4-15 Origin Reset Mode 3-4

<table>
<tr><td>Motion frame diagram</td><td colspan="3">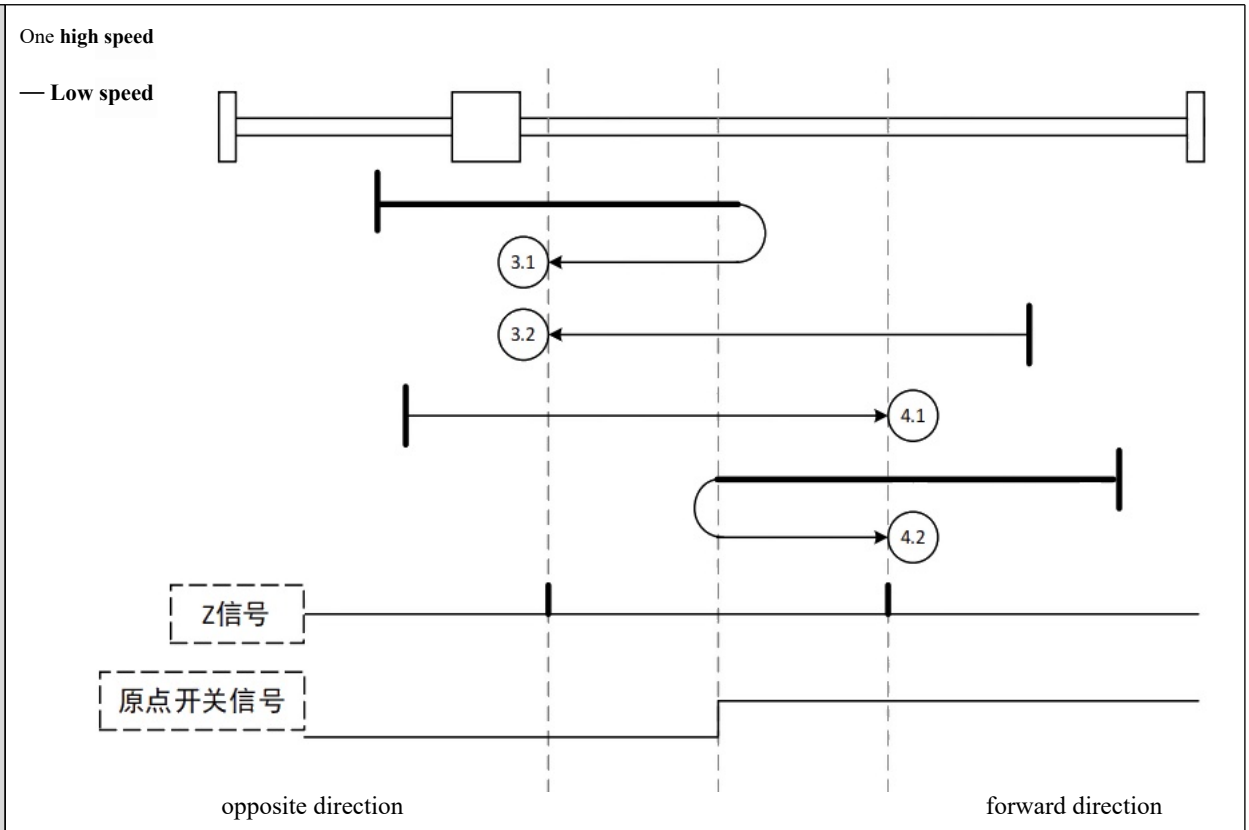
</td></tr>
<tr><td rowspan="2">framing signal</td><td>origin</td><td colspan="2">The deceleration point</td></tr>
<tr><td>Z believed number</td><td colspan="2">Origin switch signal</td></tr>
<tr><td rowspan="4">Method 3</td><td colspan="3">Action description</td></tr>
<tr><td colspan="3">Note: Different initial conditions, different actions</td></tr>
<tr><td>initial condition</td><td colspan="2">Reset action</td></tr>
<tr><td>3.1-Zero time deceleration point is invalid</td><td colspan="2">When starting back to zero, it is running at high speed in the forward direction. After encountering the rising edge of the origin switch signal, it runs in reverse low speed and stops after encountering the first Z signal after the falling edge of the origin switch signal</td></tr>
<tr><td></td><td>3.2-Zero deceleration point is valid</td><td colspan="2">When returning to zero, start with reverse low-speed return to zero directly. Stop when the first Z signal is encountered after the falling edge of the origin switch signal</td></tr>
<tr><td rowspan="4">Method 4</td><td colspan="3">Action description</td></tr>
<tr><td colspan="3">Note: Different initial conditions, different actions</td></tr>
<tr><td>initial condition</td><td colspan="2">Reset action</td></tr>
<tr><td>4.1-Zero time deceleration point is invalid</td><td colspan="2">Start back to zero directly at the low speed of forward return to zero. Stop when the first Z signal is encountered after the rising edge of the origin switch signal</td></tr>
<tr><td></td><td>4.2-Zero deceleration point is valid</td><td colspan="2">When starting back to zero, it runs in reverse high speed. After encountering the falling edge of the origin switch signal, it runs in forward low speed. After encountering the first Z signal after the rising edge of the origin switch signal, it stops.</td></tr>
</table>

IV) Method 5-6:

Table 4-16 Origin Reset Mode 5-6

Motion frame diagram	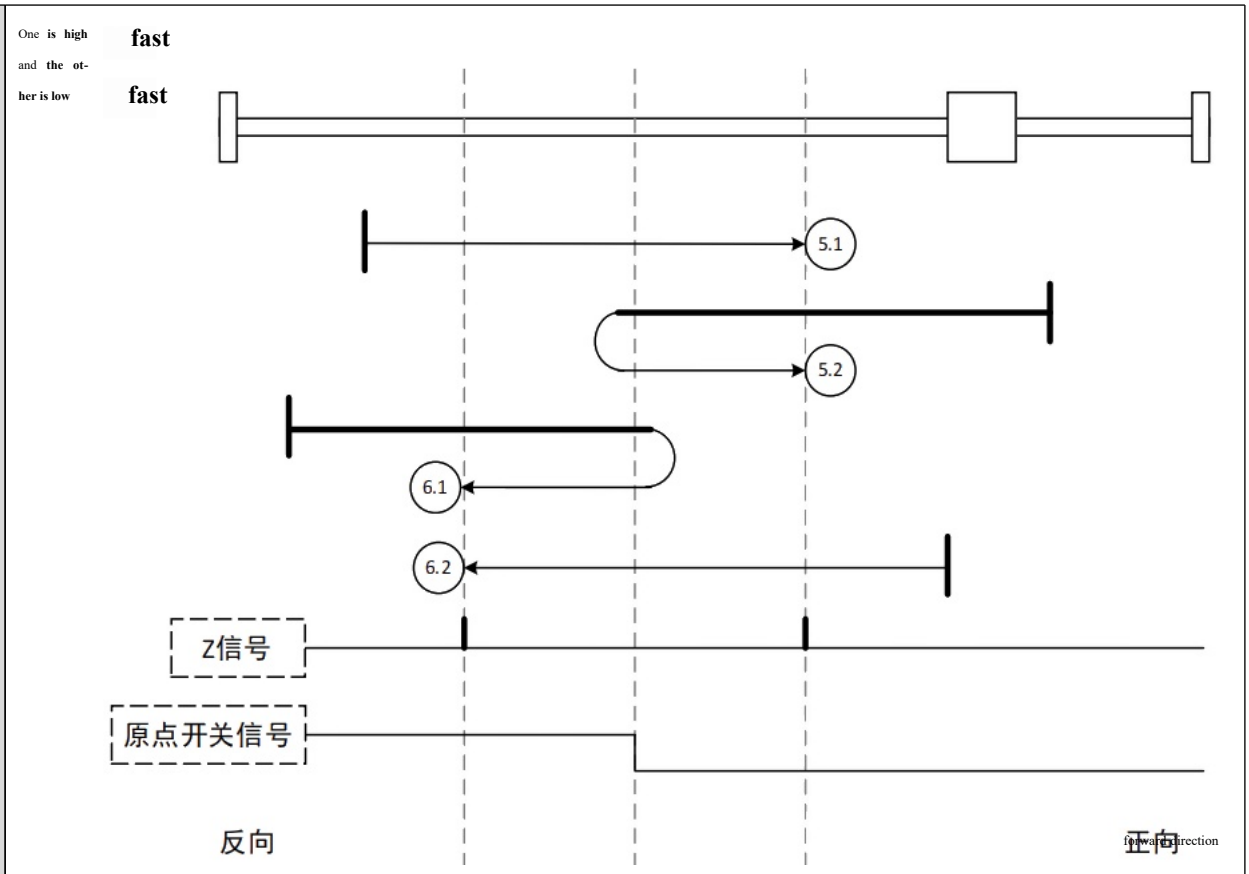	
framing signal	origin	The deceleration point
	Z believed it	Origin switch signal
Method 5	Action description	
	Note: Different initial conditions, different actions	
	initial condition	Zeroing action
	5.1. The zero return speed point is effective	When returning to zero, start with a positive low-speed return to zero directly. Stop when the first Z signal is encountered after the falling edge of the origin switch signal
	5.The 2nd zero return speed point is invalid	When starting back to zero, it runs in reverse high speed. After encountering the rising edge of the origin switch signal, it runs in forward low speed and stops after encountering the first Z signal after the falling edge of the origin switch signal
Method 6	Action description	
	Note: Different initial conditions, different actions	
	initial condition	Zeroing action
	6.1. The zero return speed point is effective	When starting back to zero, it runs at high speed in the forward direction. After encountering the falling edge of the origin switch signal, it runs in reverse low speed and stops after encountering the first Z signal after the rising edge of the origin switch signal
	6.The 2nd zero return speed point is invalid	When returning to zero, start reversing low speed back to zero directly. Stop when the first Z signal is encountered after the rising edge of the origin switch signal

V) Method 7-10:

Table 4-17 Origin Reset Mode 7-10

Motion frame diagram	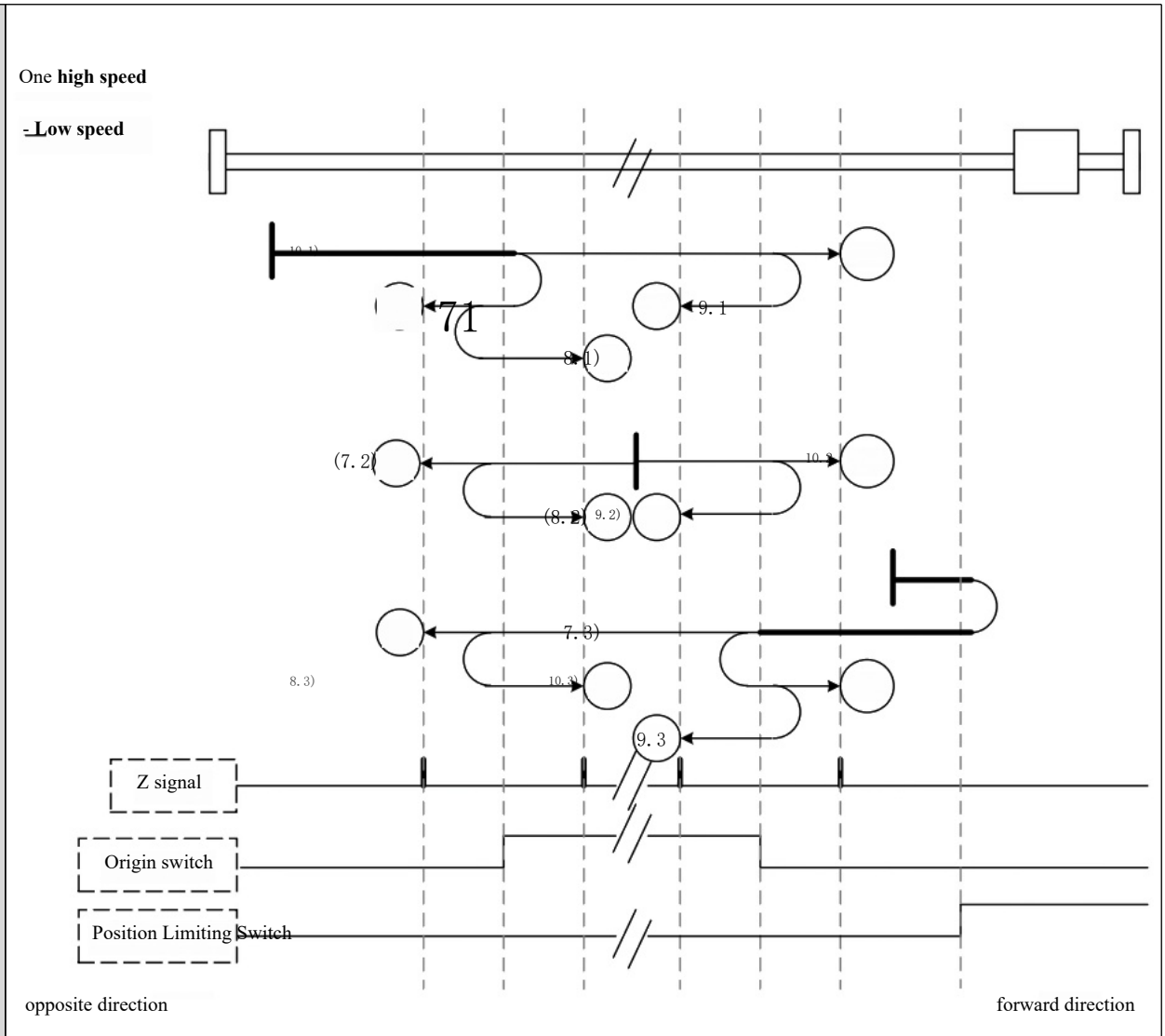

framing signal	origin	The deceleration point
	Z believed number	Origin switch signal

Method 7	Action description	
	Note: Different initial conditions, different actions	
	initial condition	Reset action
	7. 1. Zero time deceleration point is invalid, and no positive limit switch is encountered in the process	When starting back to zero, it is running at high speed in the forward direction. After encountering the rising edge of the origin switch signal, it runs in reverse low speed and stops after encountering the first Z signal after the falling edge of the origin switch signal
	7.2-Zero time deceleration point is valid	When returning to zero, start with reverse low-speed return to zero directly. Stop when the first Z signal is encountered after the falling edge of the origin switch signal
	7. The 3rd zero-time deceleration point is invalid, and the forward limit switch is encountered in the process	When starting to return to zero, the system is running at high speed in the forward direction. **Before encountering the origin switch, it meets the forward limit signal**. Then it runs in reverse high speed. After encountering the rising edge of the origin switch signal, it continues to run in reverse low speed. Finally, it stops when the first Z-bus signal appears after the falling edge of the origin switch signal.

<table>
<tr><td rowspan="5">Method 8</td><td colspan="2">Action description</td></tr>
<tr><td colspan="2">Note: Different initial conditions, different actions</td></tr>
<tr><td>initial condition</td><td>Reset action</td></tr>
<tr><td>8. 1. The zero-time deceleration point is invalid, and the forward limit switch is not encountered in the process</td><td>When starting back to zero, it runs at high speed in the forward direction. When encountering the rising edge of the origin switch signal, it runs in reverse low speed. When encountering the falling edge of the origin switch signal, it runs in forward low speed. The machine stops when the first Z signal is encountered after the rising edge of the origin switch signal.</td></tr>
<tr><td>8.2-Zero deceleration point is valid</td><td>When starting back to zero, run in reverse low speed. After encountering the falling edge of the origin switch signal, run in forward low speed. Stop after encountering the first Z signal after the rising edge of the origin switch signal</td></tr>
<tr><td>8.The 3rd zero-time deceleration point is invalid, and the forward limit switch is encountered in the process</td><td>When returning to zero position while running at forward high speed: Upon encountering the forward limit signal before reaching the origin switch, reverse high-speed operation is initiated. When the origin switch signal rises, transition to reverse low-speed operation. Upon detecting the falling edge of the origin switch signal, switch to forward low-speed operation. The system will stop upon encountering the first Z signal following the origin switch's rising edge.</td></tr>
<tr><td rowspan="5">Method 9</td><td colspan="2">Action description</td></tr>
<tr><td colspan="2">Note: Different initial conditions, different actions</td></tr>
<tr><td>initial condition</td><td>Reset action</td></tr>
<tr><td>9. 1. The zero-time deceleration point is invalid, and the forward limit switch is not encountered in the process</td><td>When starting to return to zero, the positive direction is running at high speed. After encountering the rising edge of the origin switch signal, the positive direction is low
Run at high speed, encounter the falling edge of the origin switch signal, run in reverse low speed, and stop after encountering the first Z belief signal after the rising edge of the origin switch signal</td></tr>
<tr><td>9.2-Zero deceleration point is valid</td><td>When starting back to zero, it runs in low speed forward, and when the falling edge of the origin switch signal is encountered, it runs in low speed reverse. When the first Z signal after the rising edge of the origin switch signal is encountered, it stops running</td></tr>
<tr><td>9.The 3rd zero-time deceleration point is invalid, and the forward limit switch is encountered in the process</td><td>When starting to return to the origin, the system initially runs at high speed. Upon encountering the forward limit signal before reaching the origin switch, it switches to reverse high-speed operation. When the rising edge of the origin switch signal is detected, it operates at low speed in the forward direction. Upon detecting the falling edge of the origin switch signal, it switches back to low-speed reverse operation. The system will stop running after encountering the first Z signal following the rising edge of the origin switch signal.</td></tr>
<tr><td rowspan="5">Mode 10</td><td colspan="2">Action description</td></tr>
<tr><td colspan="2">Note: Different initial conditions, different actions</td></tr>
<tr><td>initial condition</td><td>Reset action</td></tr>
<tr><td>10. 1. The zero-time deceleration point is invalid, and the forward limit switch is not encountered in the process</td><td>When starting to return to zero, it is running at high speed and encounters the rising edge of the origin switch signal, and is low in the positive direction
When running at high speed, continue to run in low speed forward after encountering the falling edge of the origin switch signal, and stop after encountering the first Z belief signal after the falling edge of the origin switch signal</td></tr>
<tr><td>10.2-Zero deceleration point is valid</td><td>When starting back to zero, it runs forward at low speed. After encountering the falling edge of the origin switch signal, it continues to run forward at low speed and stops after encountering the first Z signal after the falling edge of the origin switch signal</td></tr>
<tr><td>10. The 3rd zero-time deceleration point is invalid, and the forward limit switch is encountered in the process</td><td>When starting back to zero, the forward speed is running. Before encountering the origin switch, the forward limit signal is encountered
The number runs at high speed in reverse, and when the rising edge of the original switch signal is encountered, it runs at low speed in forward.
After the falling edge of the origin switch signal, continue to run forward at low speed. After the falling edge of the origin switch signal, stop at the first Z signal.</td></tr>
</table>

VI) Mode 11-14:

Table 4-18 Origin Reset Mode 11-14

Motion frame diagram	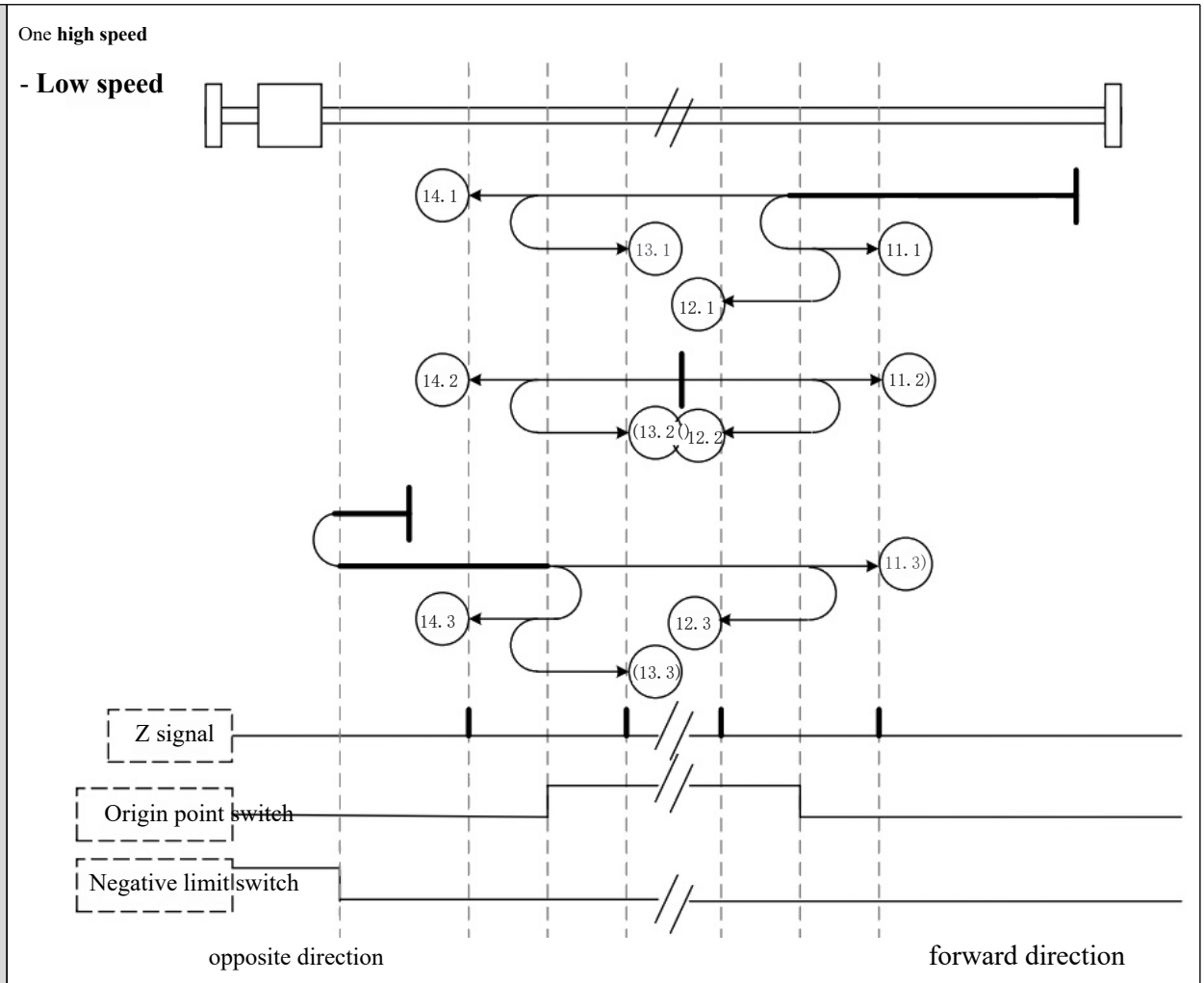

framing signal	origin	The deceleration point
	Z believed number	Origin switch signal

Method 1 1	Action description	
	Note: Different initial conditions, different actions	
	initial condition	Reset action
	11. 1. The zero time deceleration point is invalid, and the forward limit switch is not encountered in the process	When starting back to zero, it runs in reverse high speed. After encountering the rising edge of the origin switch signal, it runs in forward low speed. After encountering the first Z signal after the falling edge of the origin switch signal, it stops running.
	11.2-Zero deceleration point is valid	Start back to zero directly at the low speed of forward return to zero. Stop when the first Z signal is encountered after the falling edge of the origin switch signal
	11.The 3rd zero-time deceleration point is invalid, and the reverse limit switch is encountered in the process	When starting to return to zero, run in reverse high speed. **Before encountering the origin switch, encounter the reverse limit signal**. Run forward high speed. After encountering the rising edge of the origin switch signal, run forward low speed. Stop after encountering the first Z-bus signal after the falling edge of the origin switch signal.

Mode 12	Action description	
	Note: Different initial conditions, different actions	
	initial condition	Reset action

	12. 1. The zero-time deceleration point is invalid, and the reverse limit switch is not encountered in the process	When starting back to zero, it runs in reverse high speed. When the rising edge of the origin switch signal is encountered, it runs in forward low speed. When the falling edge of the origin switch signal is encountered, it runs in reverse low speed. The first Z signal after the rising edge of the gate signal is believed to be shut down
	12.2-Zero deceleration point is valid	When starting back to zero, it runs in low speed forward. After encountering the falling edge of the origin switch signal, it runs in low speed reverse. After encountering the first Z signal after the rising edge of the origin switch signal, it stops.
	12. The 3rd zero-time deceleration point is invalid, and the reverse limit switch is encountered during the process	When returning to zero position, the system first operates at high reverse speed. **Upon encountering the reverse limit signal before reaching the origin switch**, it switches to high forward speed. When the origin switch signal rises, it runs at low forward speed. Upon detecting the first Z signal after the origin switch signal's fall, it switches back to low forward speed. The process repeats until reaching the origin switch signal's rising edge, at which point it stops.
Method 13	Action description	
	Note: Different initial conditions, different actions	
	initial condition	Reset action
	13. 1. The zero-time deceleration point is invalid, and the reverse limit switch is not encountered in the process	When starting back to zero, run in reverse high speed. When the rising edge of the origin switch signal is encountered, run in reverse low speed. When the falling edge of the origin switch signal is encountered, run in forward low speed. When the origin switch signal is encountered, The first Z signal after the rising edge of the gate signal is believed to be shut down
	13.2-Zero deceleration point is valid	When starting back to zero, run in reverse low speed. After encountering the falling edge of the origin switch signal, run in forward low speed. Stop after encountering the first Z signal after the rising edge of the origin switch signal
	13. The 3rd zero-time deceleration point is invalid, and the reverse limit switch is encountered in the process	When returning to zero position, the system first operates at high reverse speed. **Upon encountering the reverse limit signal before reaching the origin switch**, it switches to high forward speed. When the origin switch signal rises, the system reverses to low speed operation. After detecting the first Z signal following the origin switch signal's fall, it resumes forward low-speed operation until stopping at the next rising Z signal following the origin switch signal.
Method 14	Action description	
	Note: Different initial conditions, different actions	
	initial condition	Reset action
	14. 1. The zero-time deceleration point is invalid, and the reverse limit switch is not encountered in the process	When starting back to zero, it runs in reverse high speed. When the rising edge of the origin switch signal is encountered, it runs in reverse low speed. When the falling edge of the origin switch signal is encountered, it continues to run in reverse low speed and encounters the origin. The first Z trust signal is stopped after the falling edge of the point switch signal
	14.2-Zero deceleration point is valid	When starting back to zero, run in reverse low speed. After encountering the falling edge of the origin switch signal, continue running in reverse low speed. Stop when the first Z signal is encountered after the falling edge of the origin switch signal
	14. The 3rd zero-time deceleration point is invalid, and the reverse limit switch is encountered in the process	When starting to return to zero, run in reverse high speed. **Before encountering the origin switch, encounter the reverse limit signal**. Run in forward high speed. After encountering the rising edge of the origin switch signal, run in reverse low speed. After encountering the falling edge of the origin switch signal, continue running in reverse low speed until encountering the origin switch signal. The first Z believed signal stopped after the drop

VII) Mode 15-16: Retention;

Note that mode 17-30 is similar to mode 1-14 in that it does not rely on the Z belief signal as the origin, as follows.

VIII) Method 17:

Table 4-19 Origin Reset Mode 17

<table>
<tr><td>Motion frame diagram</td><td colspan="3">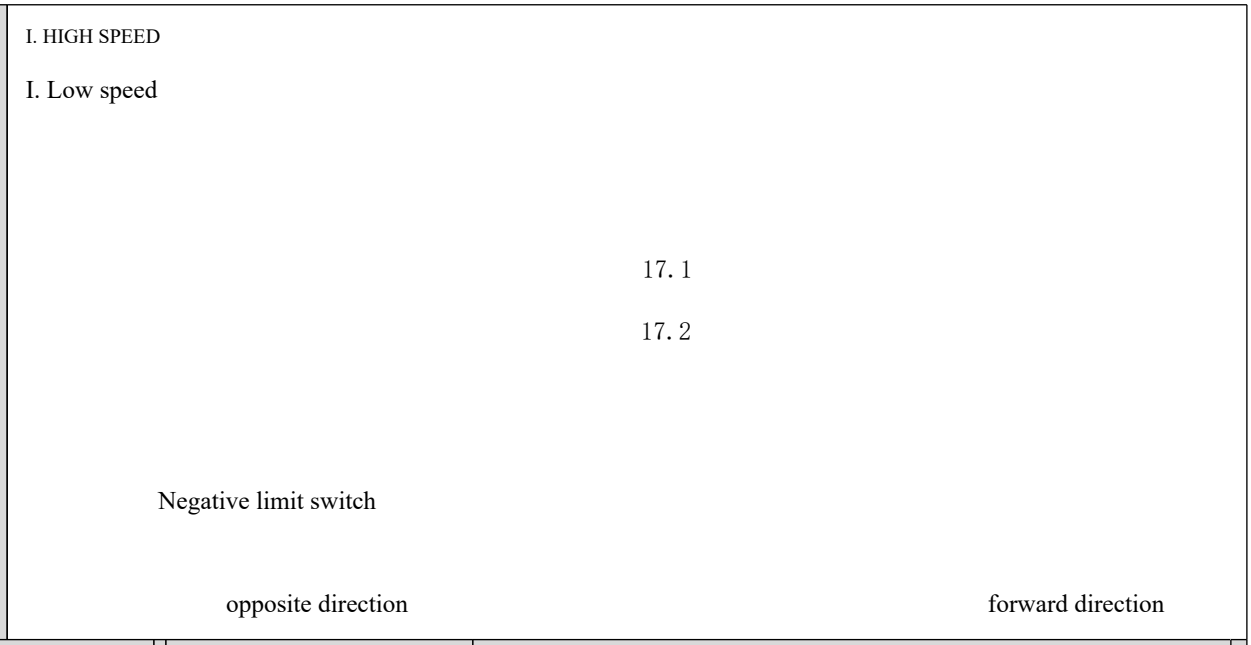
</td></tr>
<tr><td rowspan="2">framing signal</td><td>origin</td><td>The deceleration point</td></tr>
<tr><td>Negative limit switch</td><td>Negative limit switch</td></tr>
<tr><td rowspan="5">Method 17</td><td colspan="2">Action description</td></tr>
<tr><td colspan="2">Note: Different initial conditions, different actions</td></tr>
<tr><td>initial condition</td><td>Reset action</td></tr>
<tr><td>17. 1-Zero time deceleration point is invalid</td><td>When starting back to zero, it runs at high speed in reverse. When the rising edge of the reverse limit signal is encountered, it runs at low speed in forward and stops when the falling edge of the reverse limit signal is encountered</td></tr>
<tr><td>17.2-Zero deceleration point is valid</td><td>Start back to zero directly at the start of the positive low speed back to zero, and stop after encountering the falling edge of the reverse limit signal</td></tr>
</table>

IX) Method 18:

Table 4-20 Origin Reset Mode 18

<table>
<tr><td>Motion frame diagram</td><td colspan="3">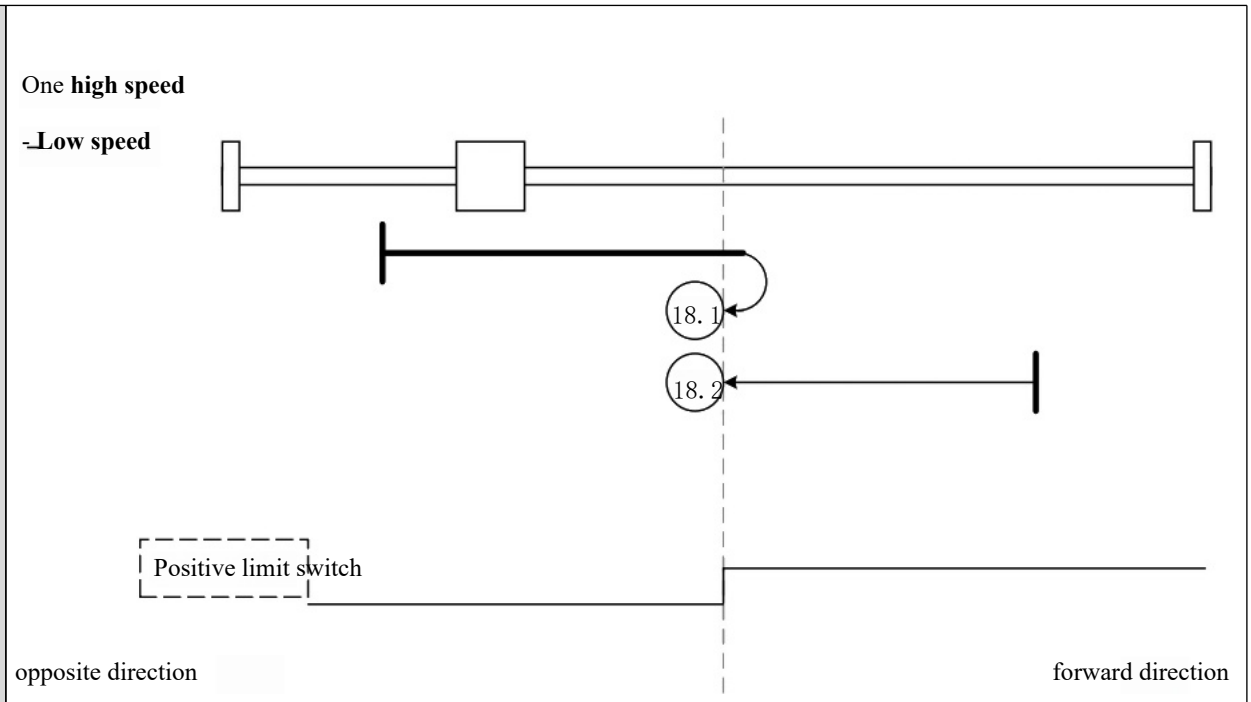
</td></tr>
<tr><td>framing signal</td><td>origin</td><td>The deceleration point</td></tr>
<tr><td></td><td>Positive limit switch</td><td>Positive limit switch</td></tr>
<tr><td rowspan="4">Method 18</td><td colspan="2">Action description</td></tr>
<tr><td colspan="2">Note: Different initial conditions, different actions</td></tr>
<tr><td>initial condition</td><td>Reset action</td></tr>
<tr><td>18. 1-Zero time deceleration point is invalid</td><td>When starting back to zero, it is running at high speed in the forward direction. After encountering the rising edge of the forward limit signal, it runs in reverse low speed and stops after encountering the falling edge of the forward limit signal</td></tr>
<tr><td></td><td>18.2-Zero deceleration point is valid</td><td>Start back to zero directly at the start of reverse low speed back to zero, and stop after encountering the falling edge of the forward limit signal</td></tr>
</table>

X) Mode 19-20:

Table 4-21 Origin Reset Mode 19-20

<table>
<tr><td>Motion frame diagram</td><td colspan="3">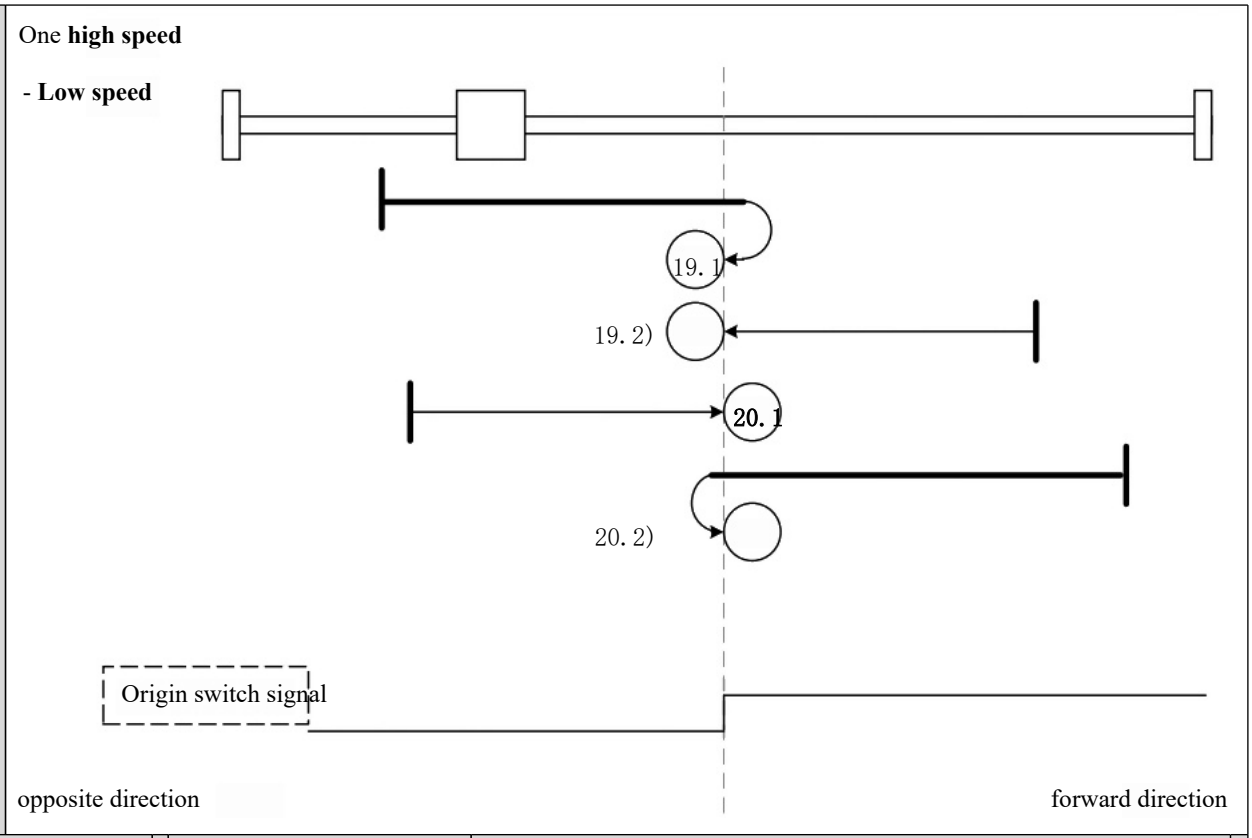
</td></tr>
<tr><td rowspan="2">framing signal</td><td>origin</td><td colspan="2">The deceleration point</td></tr>
<tr><td>Origin switch signal</td><td colspan="2">Origin switch signal</td></tr>
<tr><td rowspan="4">Method 19</td><td colspan="3">Action description</td></tr>
<tr><td colspan="3">Note: Different initial conditions, different actions</td></tr>
<tr><td>initial condition</td><td colspan="2">Reset action</td></tr>
<tr><td>19. 1-Zero time deceleration point is invalid</td><td colspan="2">When starting back to zero, it is running at high speed in the forward direction. After encountering the rising edge of the origin switch signal, it runs in reverse low speed and stops after encountering the falling edge of the origin switch signal</td></tr>
<tr><td rowspan="4">Method 20</td><td colspan="3">Action description</td></tr>
<tr><td colspan="3">Note: Different initial conditions, different actions</td></tr>
<tr><td>initial condition</td><td colspan="2">Reset action</td></tr>
<tr><td>20. 1-Zero time deceleration point is invalid</td><td colspan="2">Start back to zero directly at the start of the positive low speed back to zero, and stop after encountering the rising edge of the origin switch signal</td></tr>
<tr><td>19.2-Zero deceleration point is valid</td><td colspan="2">When returning to zero, start reverse low speed return directly and stop after encountering the falling edge of the origin switch signal</td></tr>
<tr><td>20.2-Zero deceleration point is valid</td><td colspan="2">When starting back to zero, it runs in reverse high speed. After encountering the falling edge of the origin switch signal, it runs in forward low speed and stops when encountering the rising edge of the origin switch signal</td></tr>
</table>

XI) Mode 21-22:

Table 4-22 Origin Reset Mode 21-22

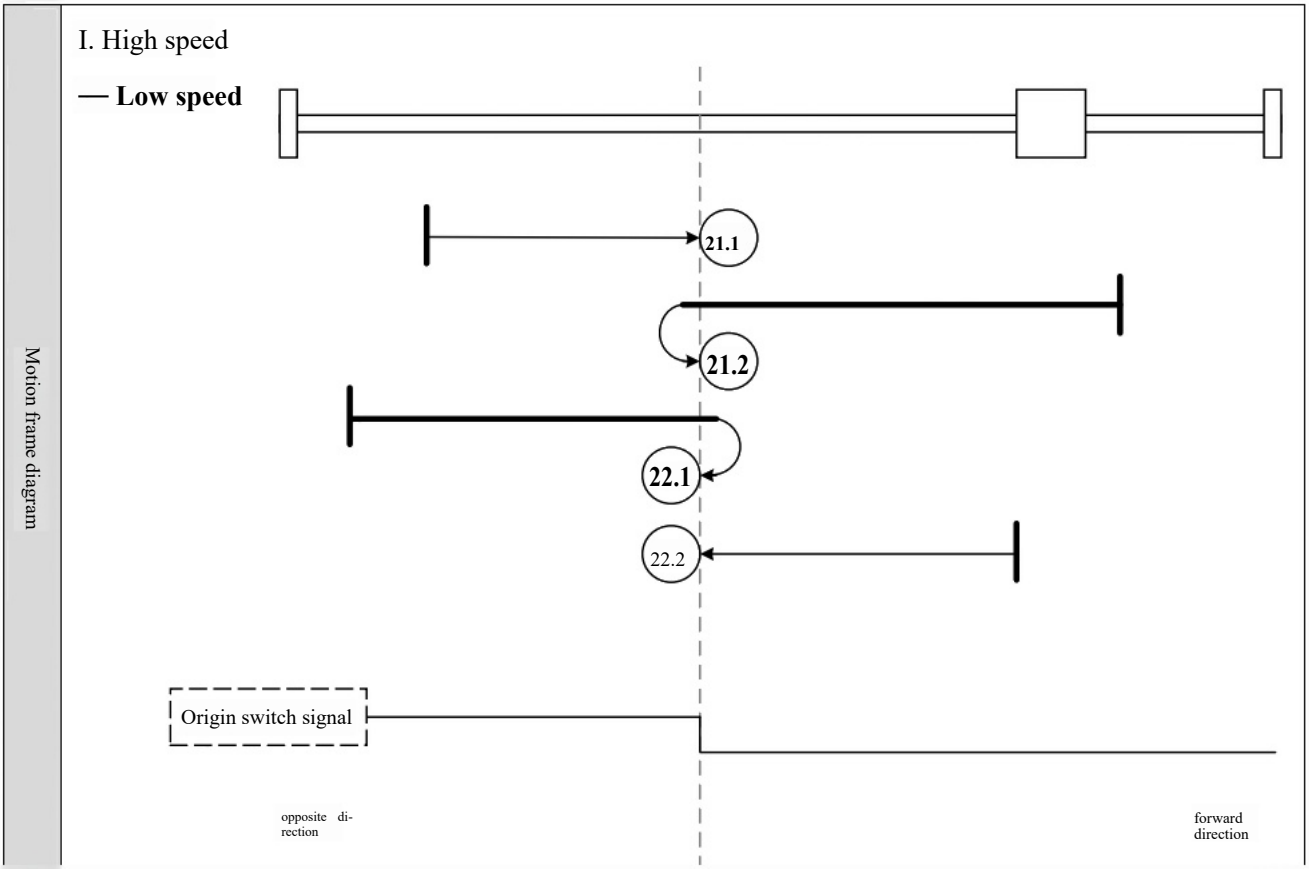

framing signal	origin	The deceleration point
	Origin switch signal	Origin switch signal

Modalities 21	Action description	
	Note: Different initial conditions, different actions	
	initial condition	Reset action
	21. 1-Zero time deceleration point is valid	Start back to zero directly at the start of the positive low speed back to zero, and stop after encountering the falling edge of the origin switch signal
	21. The 2nd zero time deceleration point is invalid	When starting back to zero, it runs in reverse high speed, and when the rising edge of the origin switch signal is encountered, it runs in forward low speed, and stops when the falling edge of the origin switch signal is encountered

Mode 22	Action description	
	Note: Different initial conditions, different actions	
	initial condition	Reset action
	22. 1-Zero time deceleration point is valid	When starting back to zero, it runs at high speed in the forward direction. When the falling edge of the origin switch signal is encountered, it runs in reverse low speed and stops when the rising edge of the origin switch signal is encountered
	22. The 2nd zero time deceleration point is invalid	When returning to zero, start reverse low-speed return directly. Stop when the rising edge of the origin switch signal is encountered

XII) Methods 23-26:

Table 4-23 Origin Reset Mode 23-26

<table>
<tr><td>Motion frame diagram</td><td>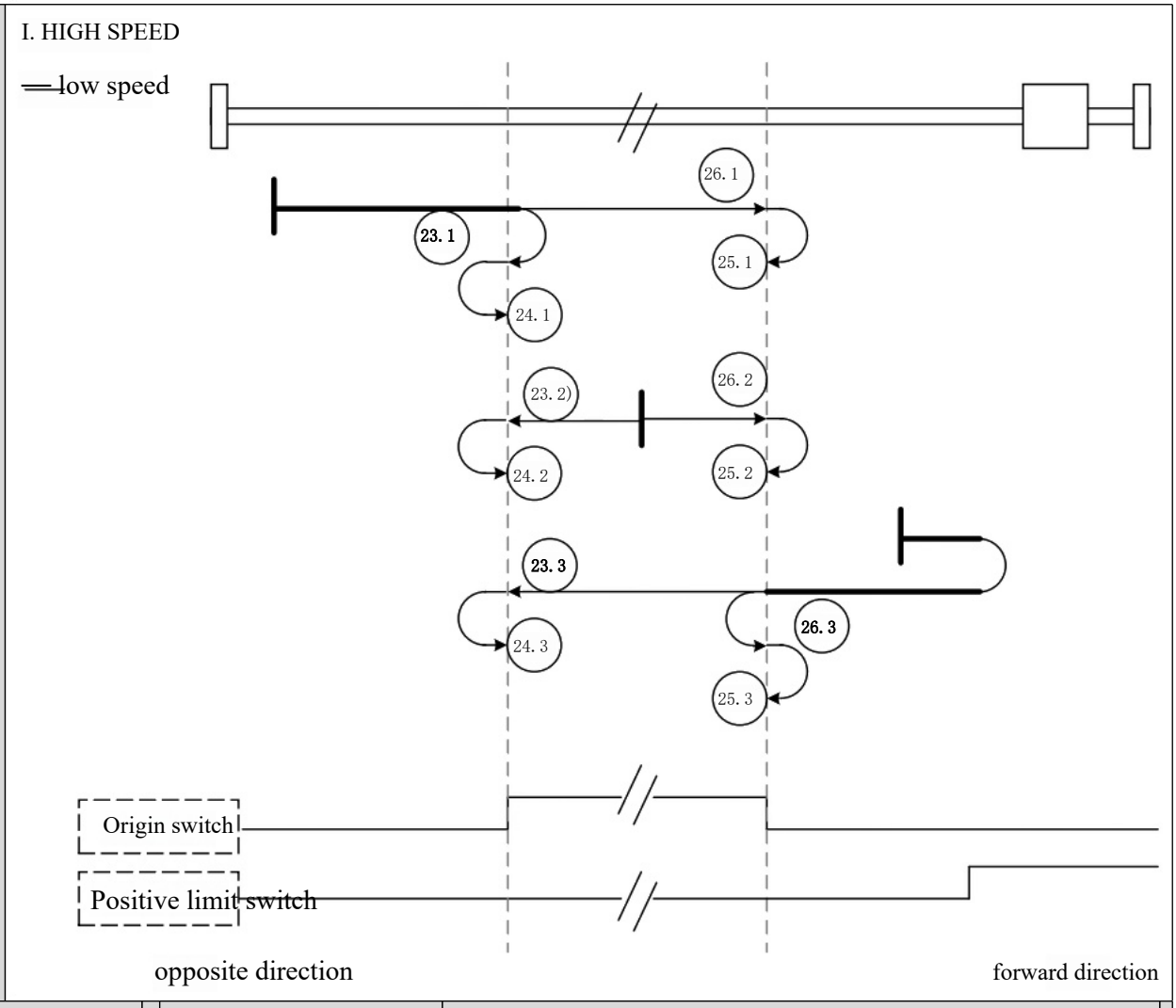
</td></tr>
<tr><td>framing signal</td><td><table>
<tr><th>origin</th><th>The deceleration point</th></tr>
<tr><td>Origin switch signal</td><td>Origin switch signal</td></tr>
</table></td></tr>
<tr><td>Mode 23</td><td><table>
<tr><th colspan="2">Action description</th></tr>
<tr><td colspan="2">Note: Different initial conditions, different actions</td></tr>
<tr><th>initial condition</th><th>Reset action</th></tr>
<tr><td>23. 1. The zero-time deceleration point is invalid, and the forward limit switch is not encountered in the process</td><td>When starting back to zero, it is running at high speed in the forward direction. After encountering the rising edge of the origin switch signal, it runs in reverse low speed and stops after encountering the falling edge of the origin switch signal</td></tr>
<tr><td>23.2-Zero deceleration point is valid</td><td>When returning to zero, start reverse low speed return immediately. Stop after encountering the falling edge of the origin switch signal</td></tr>
<tr><td>23. The 3rd zero-time deceleration point is invalid, and the forward limit switch is encountered in the process</td><td>When starting back to zero, it is running at high speed in the forward direction. Before encountering the origin switch, it encounters the forward limit signal and runs at high speed in reverse. After encountering the rising edge of the origin switch signal, it runs at low speed in reverse and stops after encountering the falling edge of the origin switch signal</td></tr>
</table></td></tr>
<tr><td>Method 24</td><td><table>
<tr><th colspan="2">Action description</th></tr>
<tr><td colspan="2">Note: Different initial conditions, different actions</td></tr>
<tr><th>initial condition</th><th>Reset action</th></tr>
<tr><td>24. 1-Zero time deceleration point is invalid, and</td><td>When starting to return to zero, it is running at high speed and encounters the rising edge of the origin switch signal in reverse low</td></tr>
</table></td></tr>
</table>

	No positive limit switch was encountered during the process	Run at high speed, and run at low speed in the forward direction after encountering the falling edge of the origin switch signal, and stop after encountering the rising edge of the origin switch signal
	24.2-Zero deceleration point is valid	When starting back to zero, run in reverse low speed. After encountering the falling edge of the origin switch signal, run in forward low speed and stop after encountering the rising edge of the origin switch signal
	24. The 3rd zero-time deceleration point is invalid, and the forward limit switch is encountered in the process	When starting to return to zero, the system runs at high speed in forward direction. **Before encountering the origin switch, it meets the forward limit signal**. Then it runs at high speed in reverse direction. After the rising edge of the origin switch signal, it runs in low speed in reverse direction. After the falling edge of the origin switch signal, it runs in low speed in forward direction. Finally, after the rising edge of the origin switch signal, the system stops.
Method 25	Action description	
	Note: Different initial conditions, different actions	
	initial condition	Reset action
	25. 1-The zero time deceleration point is invalid, and the forward limit switch is not encountered in the process	When starting back to zero, it runs at high speed in the forward direction. When encountering the rising edge of the origin switch signal, it runs at low speed in the forward direction. When encountering the falling edge of the origin switch signal, it runs at low speed in the reverse direction. When encountering the rising edge of the origin switch signal, it stops running
	25.2-Zero deceleration point is valid	When starting back to zero, it runs in low speed forward, and when the falling edge of the origin switch signal is encountered, it runs in low speed reverse, and when the rising edge of the origin switch signal is encountered, it stops
	25. The 3rd zero-time deceleration point is invalid, and the forward limit switch is encountered in the process	When starting to return to zero, the system is running at high speed in forward direction. **Before encountering the origin switch, it meets the forward limit signal**. Then it runs at high speed in reverse direction. After the rising edge of the origin switch signal, it runs at low speed in forward direction. After the falling edge of the origin switch signal, it runs at low speed in reverse direction. Finally, it stops after encountering the rising edge of the origin switch signal again.
Method 26	Action description	
	Note: Different initial conditions, different actions	
	initial condition	Reset action
	26. 1. The zero-time deceleration point is invalid, and the forward limit switch is not encountered in the process	When starting back to zero, it runs at high speed in the positive direction. After encountering the rising edge of the origin switch signal, it runs in low speed in the positive direction. After encountering the falling edge of the origin switch signal, it continues to run in low speed in the positive direction and stops after encountering the falling edge of the origin switch signal
	26.2-Zero deceleration point is valid	When starting back to zero, it runs forward at low speed. After encountering the falling edge of the origin switch signal, it continues to run forward at low speed and stops after encountering the falling edge of the origin switch signal
	26. The 3rd zero-time deceleration point is invalid and the forward limit switch is encountered during the process	When returning to zero position: The system initially runs at high speed in the forward direction. **Upon encountering the forward limit signal before reaching the origin switch**, it switches to reverse high-speed operation. When detecting the rising edge of the origin switch signal, it enters low-speed forward mode. After the signal's falling edge occurs, the system maintains this low-speed forward state until the next falling edge is detected, ultimately terminating the process.

XIII) Methods 27-30:

Table 4-24 Origin Reset Mode 27-30

Motion frame diagram

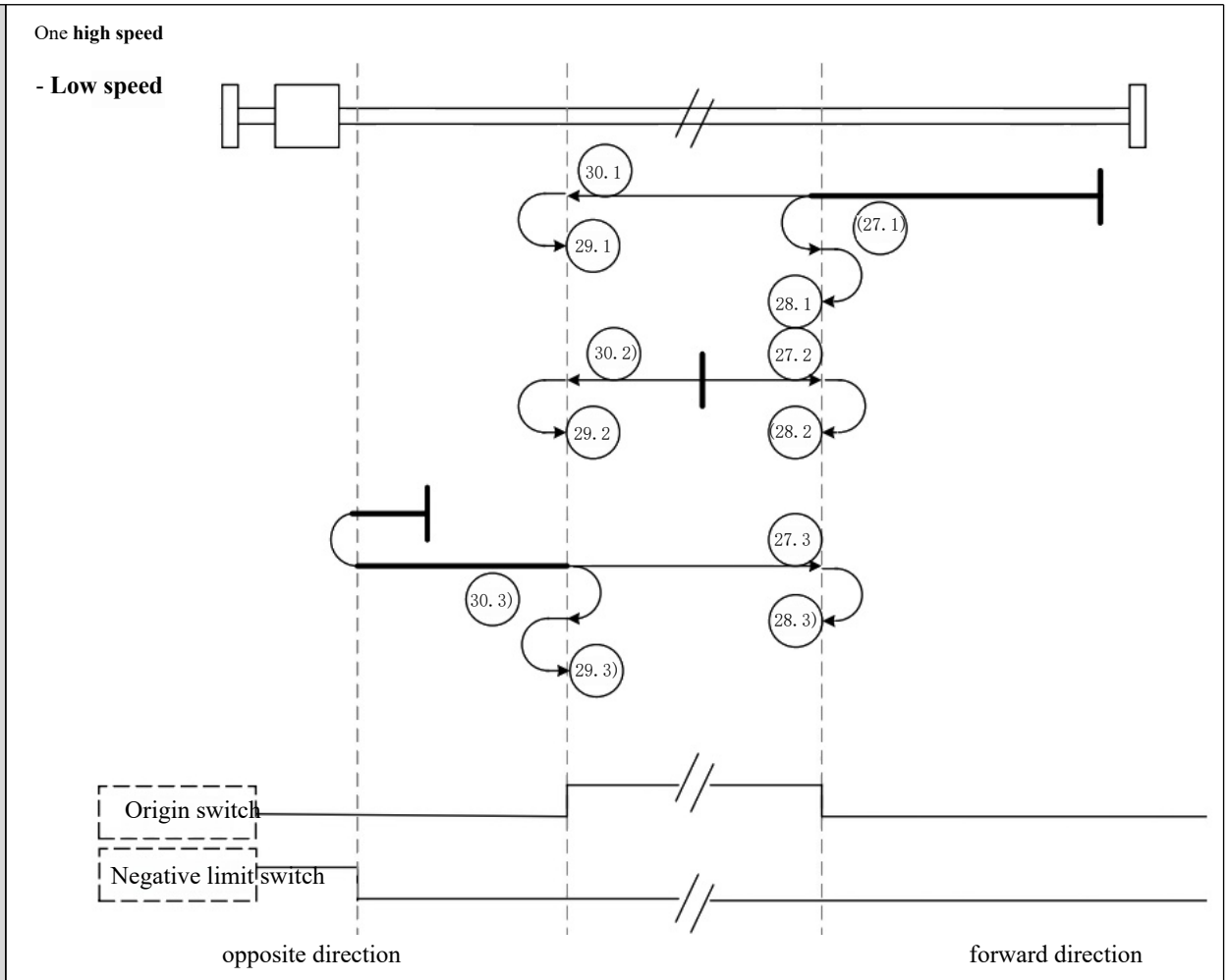

framing signal	origin	The deceleration point
	Origin switch signal	Origin switch signal

Method 27	Action description	
	Note: Different initial conditions, different actions	
	initial condition	Reset action
	27. 1. The zero-time deceleration point is invalid, and the forward limit switch is not encountered in the process	When starting back to zero, it runs in reverse high speed. When the rising edge of the origin switch signal is encountered, it runs in forward low speed and stops when the falling edge of the origin switch signal is encountered
	27.2-Zero deceleration point is valid	Start back to zero directly at the start of the positive low speed back to zero, and stop after encountering the falling edge of the origin switch signal
	27.The 3rd zero-time deceleration point is invalid, and the reverse limit switch is encountered in the process	When starting back to zero, run in reverse high speed and **encounter the reverse limit signal before encountering the origin switch** The positive direction runs at high speed, and after encountering the rising edge of the origin switch signal, the positive direction runs at low speed, and after encountering the falling edge of the origin switch signal, the machine stops

Method 28	Action description	
	Note: Different initial conditions, different actions	
	initial condition	Reset action
	28. 1-Zero time deceleration point is invalid, and	When starting to return to zero, run in reverse high speed. When the rising edge of the original switch signal is encountered, the forward low is

	No reverse limit switch was encountered during the process	Run at high speed, and run in reverse low speed after encountering the falling edge of the origin switch signal, and stop after encountering the rising edge of the origin switch signal
	28.2-Zero deceleration point is valid	When starting back to zero, it runs in low speed forward, and when the falling edge of the origin switch signal is encountered, it runs in low speed reverse, and when the rising edge of the origin switch signal is encountered, it stops
	28. The 3rd zero-time deceleration point is invalid, and the reverse limit switch is encountered in the process	When starting to return to zero, run in reverse high speed **until encountering the reverse limit signal before the origin switch**. Run in forward high speed. After encountering the rising edge of the origin switch signal, run in forward low speed. After encountering the falling edge of the origin switch signal, run in reverse low speed. Stop after encountering the rising edge of the origin switch signal.
Method 29	Action description	
	Note: Different initial conditions, different actions	
	initial condition	Reset action
	29. 1. The zero-time deceleration point is invalid, and the reverse limit switch is not encountered in the process	When starting back to zero, run in reverse high speed. When the rising edge of the origin switch signal is encountered, run in reverse low speed. When the falling edge of the origin switch signal is encountered, run in forward low speed. Stop when the rising edge of the origin switch signal is encountered
	29.2-Zero time deceleration point is valid	When starting back to zero, run in reverse low speed. After encountering the falling edge of the origin switch signal, run in forward low speed and stop after encountering the rising edge of the origin switch signal
	29. The 3rd zero-time deceleration point is invalid, and the reverse limit switch is encountered in the process	When starting back to zero, run in reverse high speed. **Before encountering the origin switch, it meets the reverse limit signal**. Run in forward high speed. After encountering the rising edge of the origin switch signal, reverse low speed. After encountering the falling edge of the origin switch signal, run in forward low speed. Stop after encountering the rising edge of the origin switch signal.
Method 30	Action description	
	Note: Different initial conditions, different actions	
	initial condition	Reset action
	30. 1. The zero-time deceleration point is invalid, and the reverse limit switch is not encountered in the process	When starting back to zero, it runs in reverse high speed. When encountering the rising edge of the origin switch signal, it runs in reverse low speed. When encountering the falling edge of the origin switch signal, it continues to run in reverse low speed. When encountering the origin switch signal, it runs in reverse low speed. Stop after the falling edge of the enable signal
	30.2-Zero deceleration point is valid	When starting back to zero, run in reverse low speed. After encountering the falling edge of the origin switch signal, continue running in reverse low speed and stop after encountering the falling edge of the origin switch signal
	30. The 3rd zero-time deceleration point is invalid, and the reverse limit switch is encountered in the process	When returning to zero position, the system first operates at high reverse speed. **Upon encountering the reverse limit signal before reaching the origin switch**, it switches to high forward speed. When the rising edge of the origin switch signal is detected, the system reverses to low-speed operation. Subsequent downward edges in the origin switch signal trigger continued low-speed reversal until the signal's final drop, at which point the system stops.

XIV) Modalities 31-32: retention

XV) Method 33-34:

Table 4-25 Origin Reset Mode 33-34

Motion frame diagram	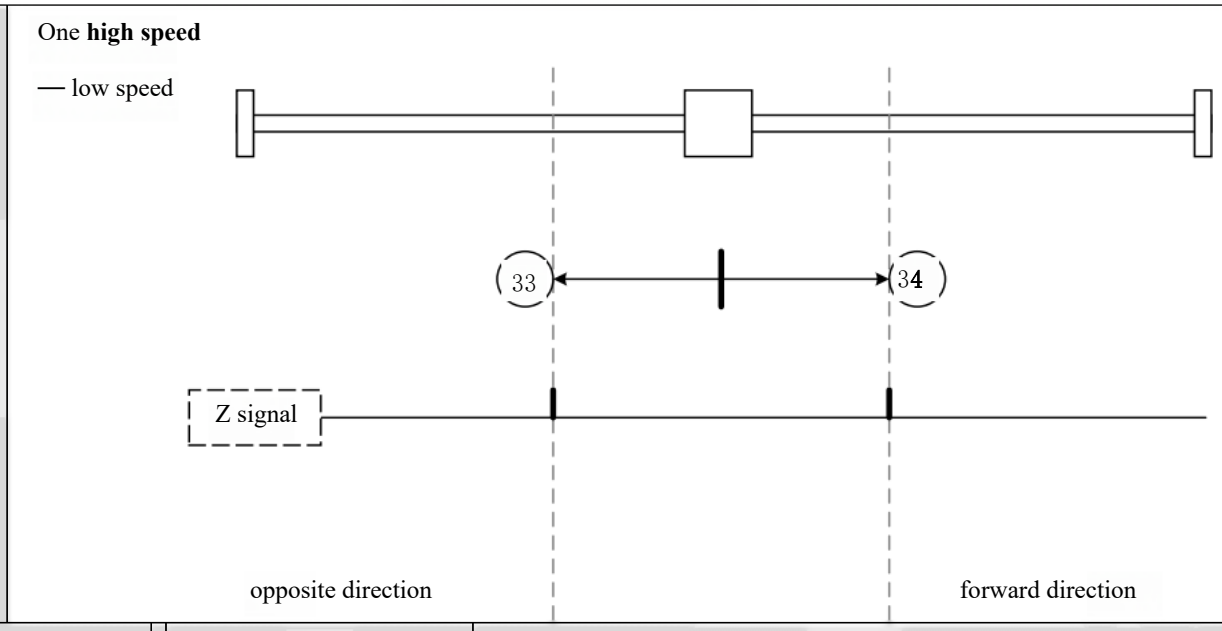	
framing signal	origin	The deceleration point
	Z believed number	not have
Mode 33	Action description	
	33-Reverse low speed operation, stop at the first Z signal	
Mode 34	Action description	
	34-Run forward at low speed and stop when the first Z signal is encountered	

XVI) Method 35:

Table 4-26 Origin Reset Mode 35

Motion frame diagram	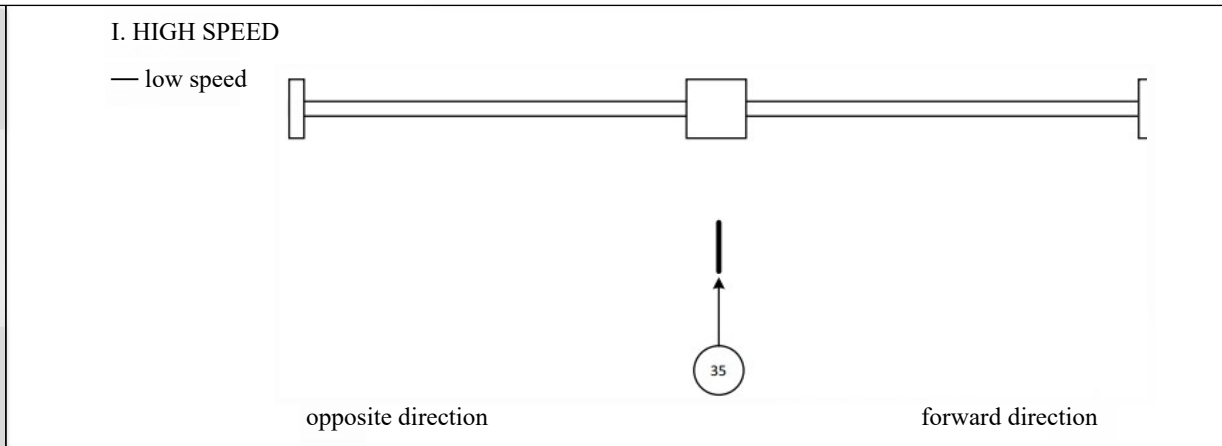	
framing signal	origin	The deceleration point
	current location	not have
Method 35	Action description	
	35-Take the current position as the origin	

XVII) Method 1:

Table 4-27 Origin Reset Mode-1

Motion frame diagram	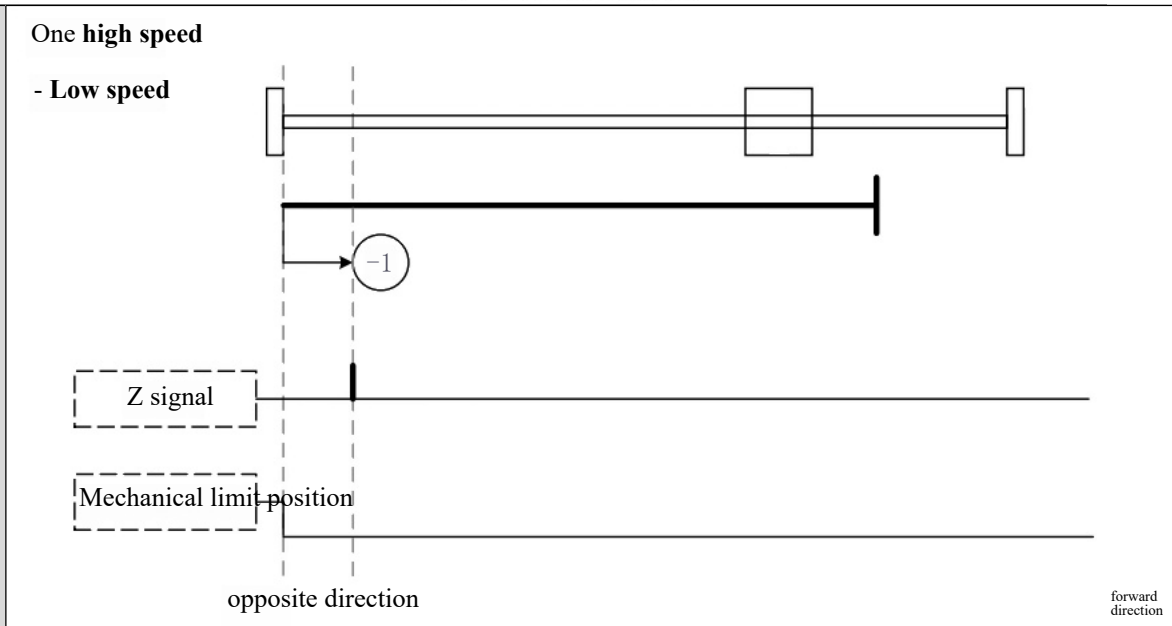

framing signal	origin	The deceleration point
	Z believed number	Mechanical limit position

	Action description
Mode 1	-1-The motor first runs in reverse high speed. After hitting the mechanical limit position, if the torque reaches the torque limit value and the speed is near zero speed, and this state is maintained for a certain period of time, it is judged that the shaft has reached the mechanical limit position, and the motor runs in forward low speed. Then it stops when encountering the first Z signal.

XVIII) Method 2:

Table 4-28 Origin Reset Mode-2

Motion frame diagram	One **high speed** **- Low speed** −2 Z signal Mechanical limit position opposite direction forward direction

framing signal	origin	The deceleration point
	Z believed number	Mechanical limit position

	Action description
Mode 2	-2-The motor first runs in high speed forward. After hitting the mechanical limit position, if the torque reaches the torque limit value and the speed is near zero speed, and this state is maintained for a certain period of time, it is judged to reach the mechanical limit position. The motor runs in low speed reverse, and then stops when encountering the first Z signal.

4.2.2 Speed Control Mode

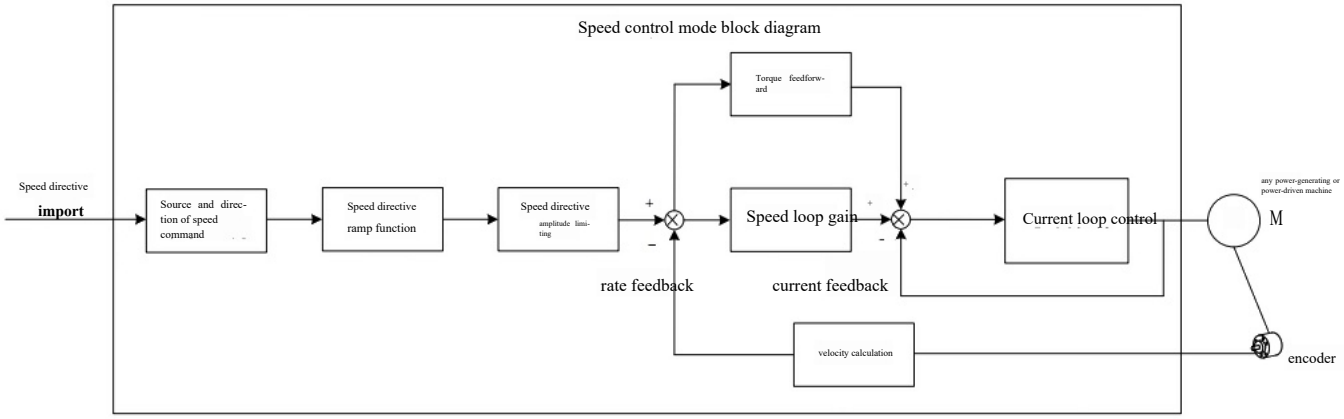

Figure 4-16 Speed Control Frame

By setting the value of parameter P04.00 to 0 through servo driver panel or DrivPRStart test platform, the servo driver will operate at speed control **pattern** 。

Please set the servo drive parameters according to the mechanical structure and indicators. The following describes the basic parameter setting when the speed control mode is adopted.

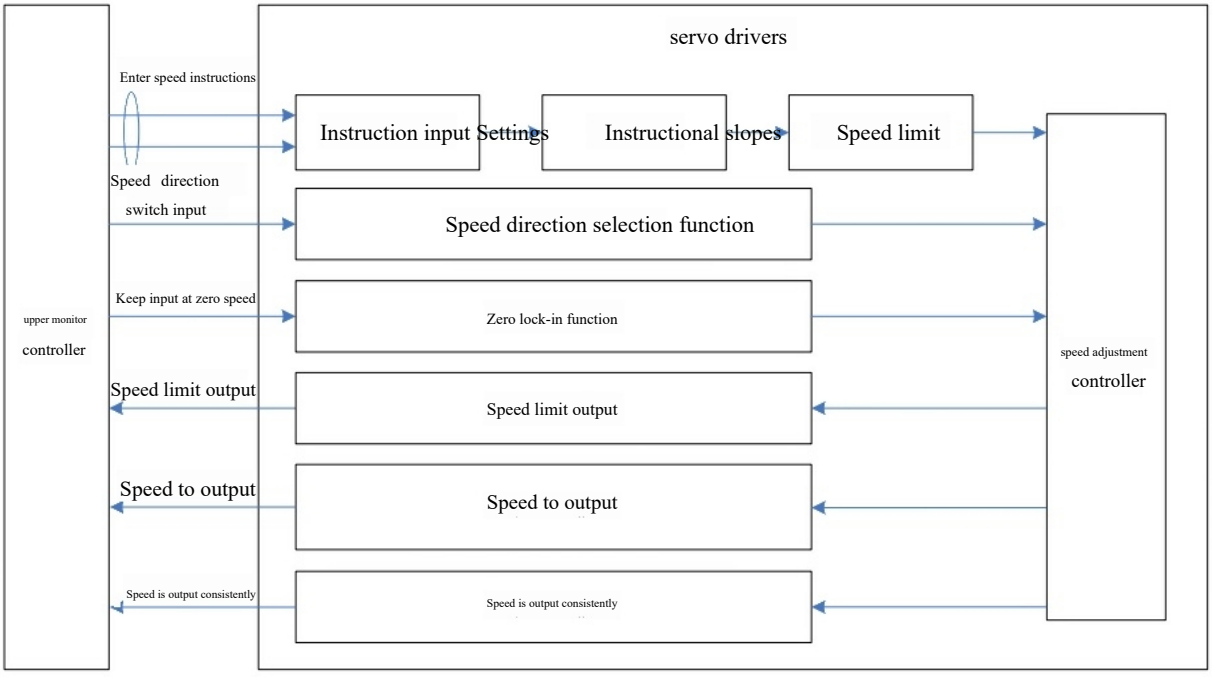

Figure 4-17 Servo Driver and Host Signal Interaction

4 2.2.1 Speed Command Input Settings

1. Source of speed instructions

The speed control mode has the following five ways to obtain speed commands, which are set through function code P14.00.

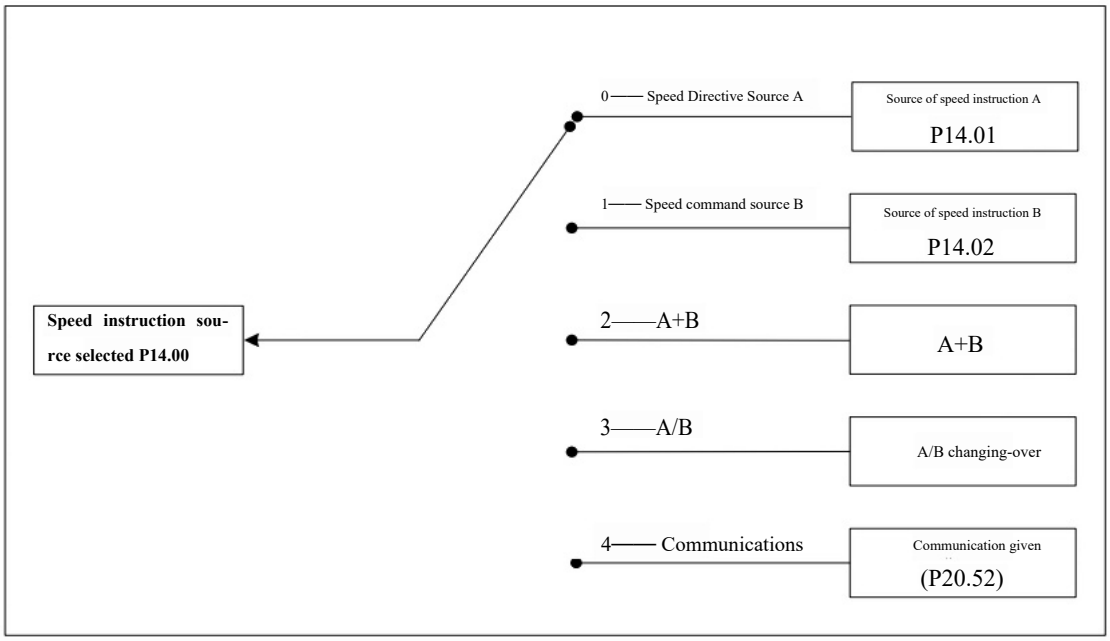

Figure 4-18 Source Selection for Speed Commands Figure

FC		name	Scope of setting	unit	function	setting way	entry-into-force time	Factory Settings
P14	00	Source selection for speed commands	0 - source A 1 - source B 2 -Source A+B 3-Source A/B DI Switching 4-Communication Given	-	Set the source selection of speed instruction	Shut down Settings	with immediate effect	0

1) Source of Speed Instruction A

The speed instruction source A includes three forms of instructions: keyboard given, analog voltage given and preset speed task instruction. Among them, the keyboard given and preset speed task instruction are internal speed instructions, and the analog voltage given is external speed instruction.

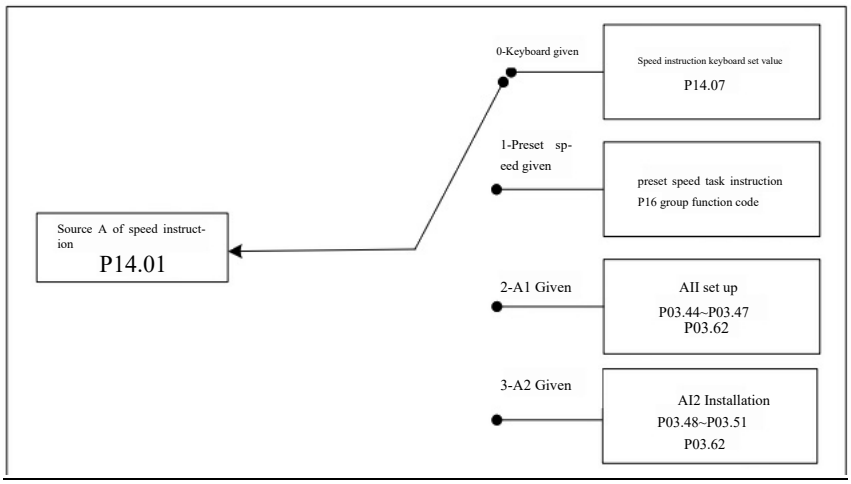

Figure 4-19 Source A of Speed Instructions Figure

FC		name	Scope of the setting	unit	function	setting way	come into force time	leave the factory setting
P14	01	Source of speed instruction A	0-keyboard given 1-preset speed given 2-AI1 given 3-AI2 given		Set the speed command source A	Shut down Settings	with immediate effect	0

① Keyboard given

Refers to the speed value set by function code P14.07 and used as a speed instruction.

FC		name	Scope of the setting	unit	function	setting way	come into force time	leave the factory setting
P14	07	Speed instruction keyboard set value	−9999~30000	rpm	Set the speed command keyboard setting value	move setting	immediately come into force	200

② The analog voltage is given

Refers to the analog voltage signal output by the upper computer or other equipment, which is processed as the speed instruction.

Simulated voltage input terminal:

The servo driver has two analog input channels: AI1 and AI2, the maximum input voltage is ±10Vdc, and the input impedance is about 9kΩ. The analog input circuit:

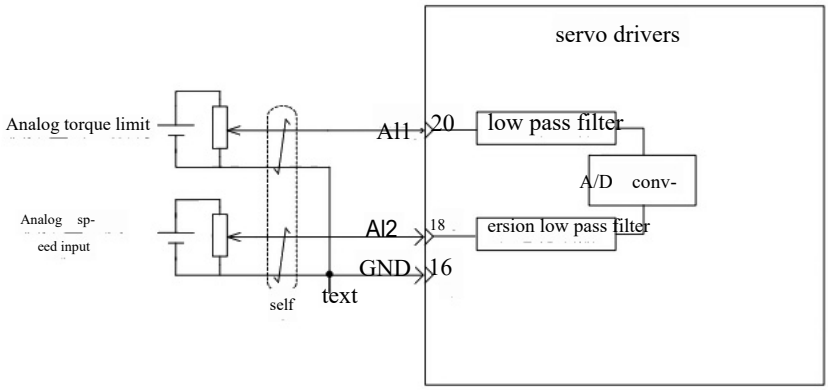

Operation method: Take AI2 as an example to illustrate the method of setting analog voltage speed command.

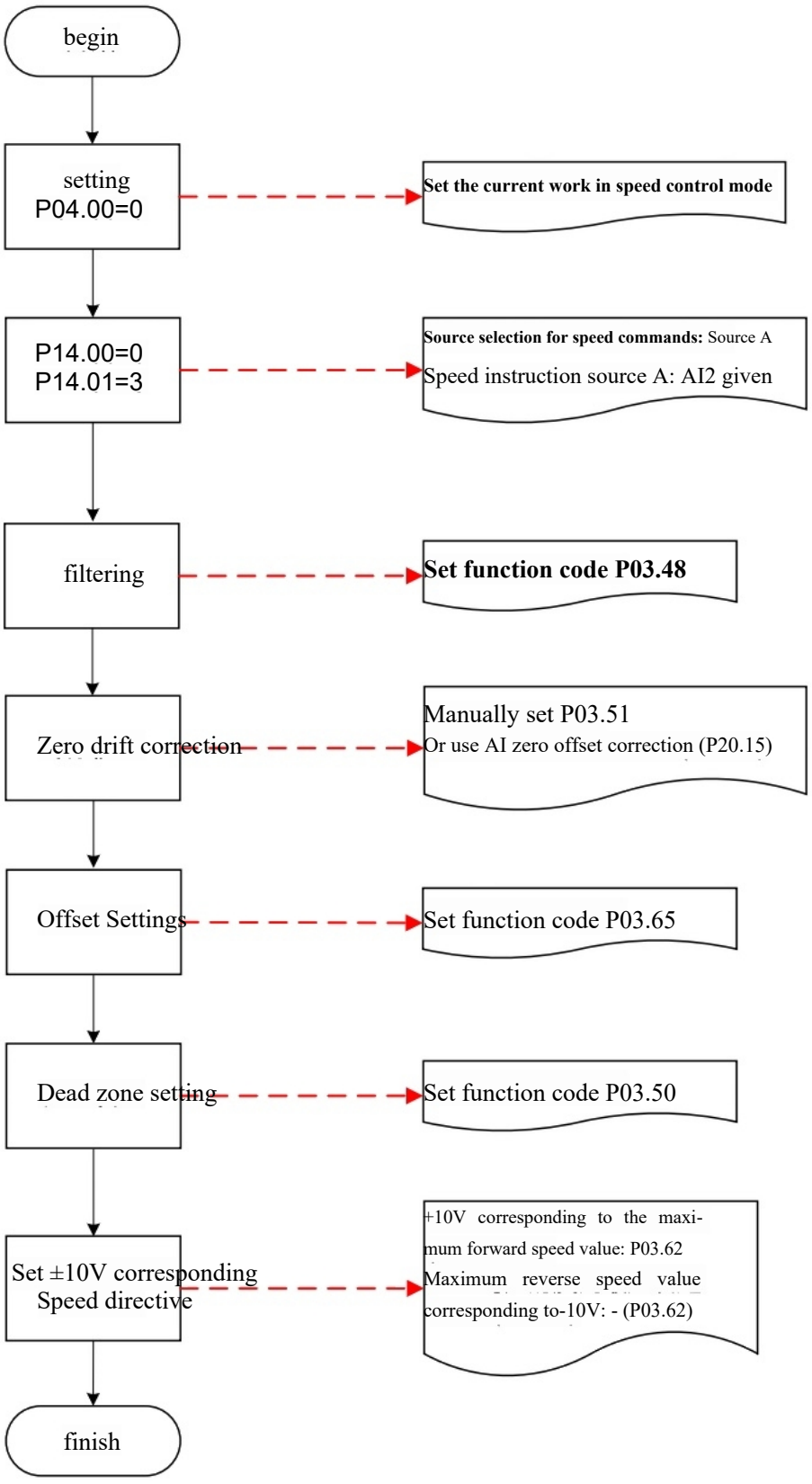

Figure 4-20 Schematic Diagram of Analog Voltage Speed Command Operation

Zero drift: refers to the value of the sampling voltage relative to GND when the input voltage of the analog channel is zero.

Offset: refers to the corresponding analog channel input voltage value when the sampling voltage is zero after zero drift correction .

Dead zone: refers to the input voltage range of the corresponding analog channel when the sampling voltage is zero. The unprocessed output voltage of the analog channel is shown as y1 in Figure 4-21. After internal processing by the servo driver, the final speed command y6 is obtained .

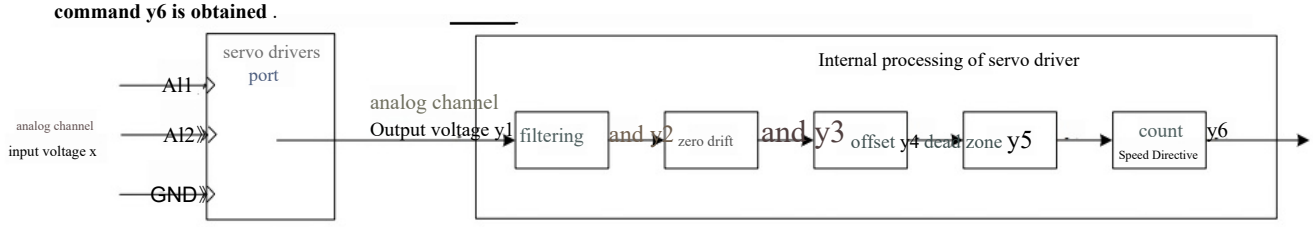

Figure 4-21 AI Processing Flow of Servo Driver

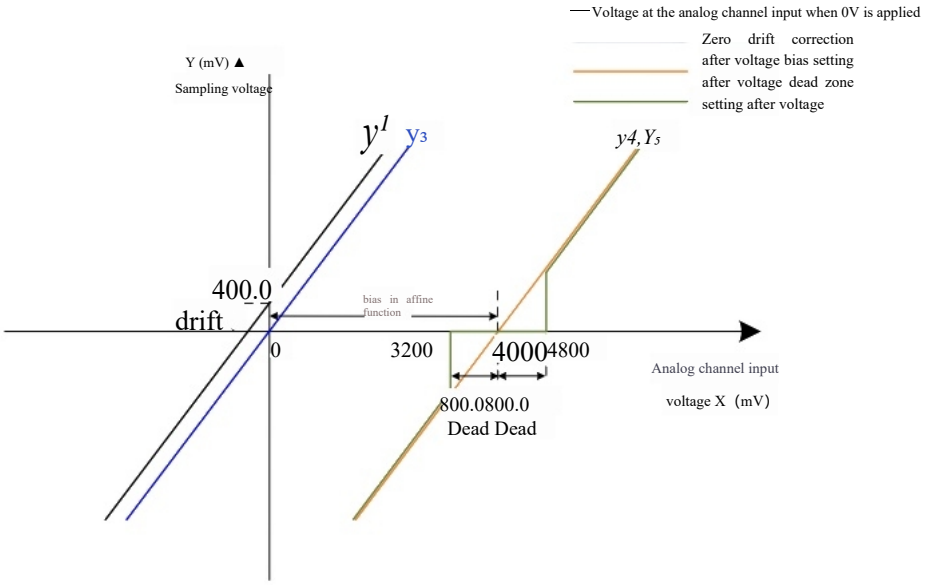

Figure 4-22 Examples of Servo Driver AI Processing Corresponding to Sampling Voltage

■ filtering：

The servo driver provides analog channel filtering function. By setting the filter time constant P03.48, it can prevent the motor command fluctuation caused by unstable analog input voltage, and weaken the motor error action caused by interference signals. The filtering function has no effect on eliminating or suppressing zero drift and dead zone.

■ Zero floating correction:

When the actual input voltage is 0V, the analog channel output voltage deviates from 0V.

In the figure, the output voltage of the analog channel without internal processing of the driver is shown as y1. Taking the filter time constant P03.48=0.00ms as an example, the filtered sampling voltage y2 is consistent with y1.

It can be seen that when the actual input voltage x=0, the output voltage y1=400.0mV, which is 400.0mV, is called zero drift.

Manual setting of P03.48=400.0 (mV). After zero drift correction, the sampling voltage is shown as y3. y3=y1-400.0

Zero drift can also be automatically corrected by the analog channel auto-adjustment function (P20.15).

Offset Settings:

Set the sampling voltage to 0 and correspondingly set the actual input voltage value.

As shown in the figure, when the preset sampling voltage y4=0, the corresponding actual input voltage x=4000mV, which is called the bias.

Manual setting of P02.49=4000 (mV). After biasing, the sampling voltage y4=x-4000=y3-4000

■ dead-space correction：

The effective input voltage range when the sampling voltage of the limiting driver is not 0.

After the offset setting is completed, when the input voltage x is within 3200mV and 4800mV, the sampling voltage value is 0. This 800.0mV is called the dead zone.

Set P03.50=800.0, and after dead zone correction, the sampling voltage is shown as y5.

$$y_5 = \begin{cases} 0 & 3200 \leqslant x \leqslant 4800 \\ y_4 & 4800 < x \leqslant 10000 \text{或} -10000 \leqslant x < 3200 \end{cases}$$

■ Calculation speed instruction:

After the zero drift, offset and dead zone are set, the sampling voltage at this time should be set through P03.62.10V (the speed command value corresponding to 10,000mV, the actual speed command y6:

$$y_6 = \frac{y_5}{10000} \times (P03.62)$$

This value will be given as the analog speed command of the speed control mode.

As shown in Figure 4-23 (left) for unbiased cases and Figure 4-23 (right) for biased cases, the AI2 sampling voltage value can be viewed in real-time via P09.23 after proper configuration, while the corresponding speed command value of the input analog signal can be checked through P 09.01.

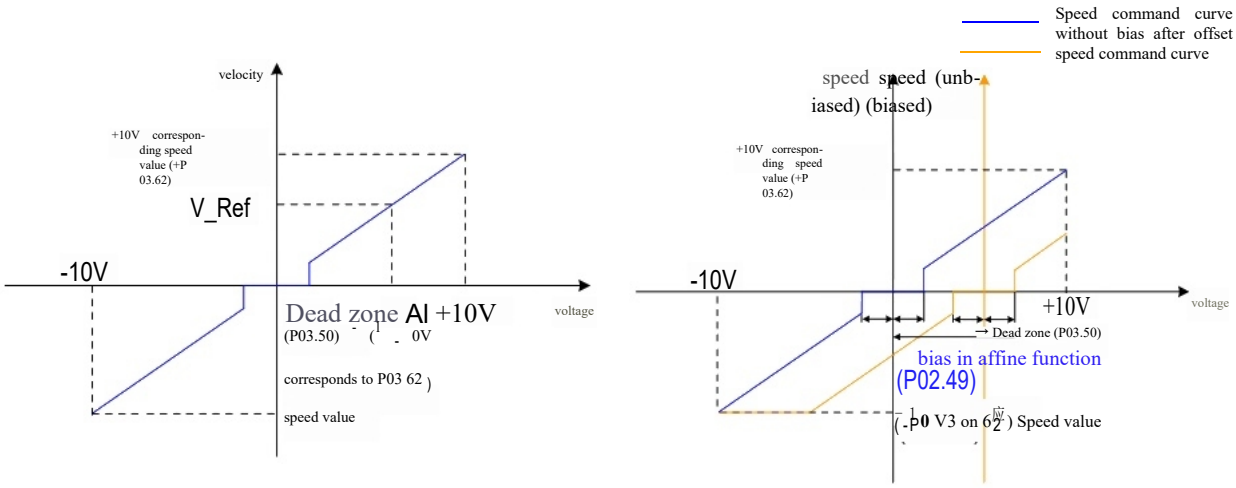

Figure 4-23 Schematic Diagram of Unbiased AI2 (left) and Schematic Diagram of Biased AI2 (right) The Relationship Between the Final Speed Command Value Y6 and Input Voltage X:

$$y_6 = \begin{cases} 0 & B-C \leqslant x \leqslant B+C \\ x-B & B+C < x \leqslant 10000 \text{或} -10000 \leqslant x < B-C \end{cases}$$

Among them: B: bias; C: dead zone.

FC		name	Scope of the setting	unit	function	Meth-odology	entry-into-force time	Factory Settings
P02	49	AI2 offset voltage	-10000~10000	mV	Set the analog bias value of AI2 channel	Operat-ing Sett-ings	with immediate effect	0
P03	48	AI2 input filter time	0~655.35	ms	Set the average filter time constant of analog signal in AI2 channel	Operat-ing Sett-ings	with immediate effect	2.00
P03	50	AI2 dead zone	0~1000.0	mV	Set the analog dead zone value of AI2 channel	Operat-ing Sett-ings	with immediate effect	10.0
P03	51	AI2 zero drift	-500.0~500.0	mV	Set the analog zero drift value of AI2 channel	Operat-ing Sett-ings	with immediate effect	0.0
P03	62	The simulated 10V corresponds to the speed value	0~6000	rpm	Set the analog 10V corresponding to the speed value	Shut down Settings	with immediate effect	3000
P20	15	AI drift correction	0-No operation 1-AI1 adjust-ment 2-AI2 adjustment		Simulated AI1 and AI2 channels enable zero drift auto-correction	Shut down Settings	with immediate effect	0

Note: When the analog AI1 input channel is selected, the setting method is similar to that described above for analog AI2. For related function codes, see Chapter 7.

2) Source of Speed Instruction B

Speed instruction source B includes three forms of instructions: keyboard given, analog voltage given and preset speed task. Among them, keyboard given and preset speed task are internal speed instructions, and analog voltage given is external speed instructions.

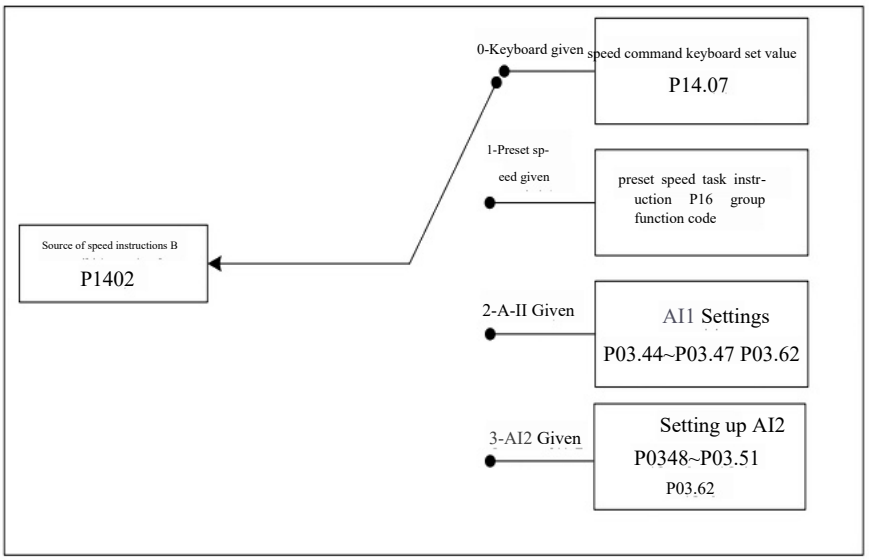

Figure 4-24 Speed Command Source B Figure

FC		name	Scope of the setting	unit	function	Meth-odology	entry-into-force time	Factory Settings
P14	02	Source of speed instruction B	0-Keyboard given 1-Preset speed given 2-AI1 given 3-AI2 given	-	Set speed command source B	Shut down Settings	with immedi-ate effect	1

Among them, the digital voltage setting and analog voltage setting methods are the same as the speed command source A.

This section details preset speed task instructions. The servo driver features a preset speed task operation function, which stores 16 segments of speed commands internally. Each segment allows setting the maximum operating speed and duration separately, with four acceleration/deceleration time options available for selection. The configuration process is as follows:

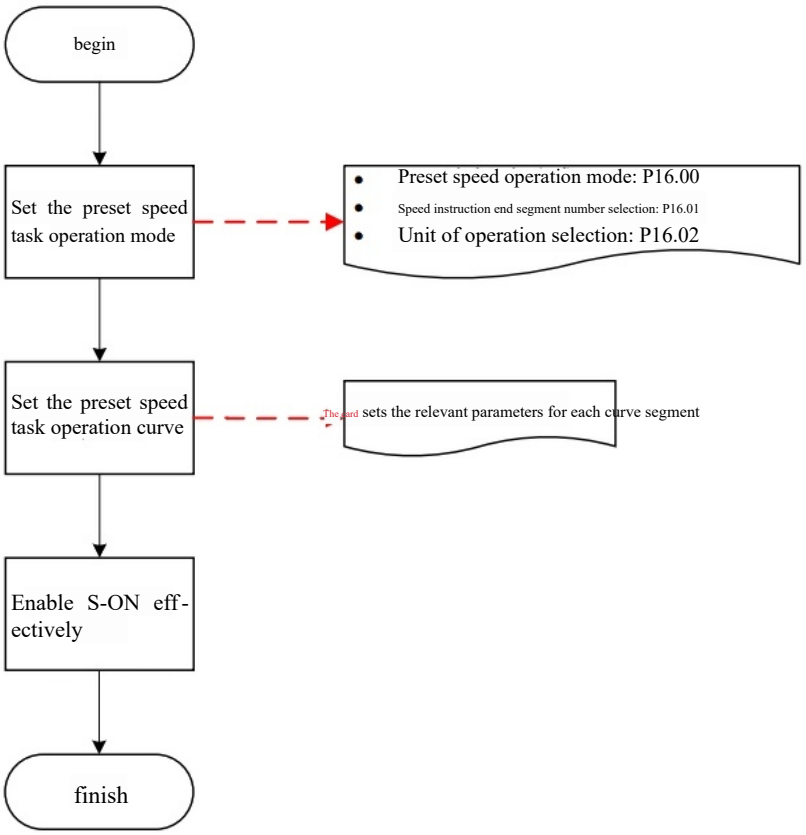

Figure 4-25 Flow Chart of Preset Speed Task Setting

① Set the preset speed task operation mode

FC		name	Scope of the setting	unit	function	Meth-odology	entry-into-force time	Factory Settings
P16	00	Preset speed command operation mode	0-single run 1-Loop operation 2-DI switching operat-ion	-	Set the preset speed command operation mode	Shut down Settings	with immediate effect	1
P16	01	Speed instruction end segment number select-ion	1~16		Set the speed command end number selection	halt	immediat-ely	16

FC		name	Scope of the setting	unit	function	Meth-odology	entry-into-force time	Factory Settings
						setting	come into force	
P16	02	Unit selection for operation time	0-S 1-min	-	Select the unit of time to set the operation	Shut down Settings	with immediate effect	0

External DI terminals can be configured and placed together as FunIN. 20: Speed command direction switching, which is used to preset the direction of position command selection.

Function number	Function name	description
FunIN. 20	Direction selection for speed inst-ructions	Invalid-Positive direction; Effective-reverse direc-tion.

Take P16.01=2 as an example to illustrate the modes.

Single run end shutdown (P16.00=0)

Function Code P16.00 should be set to 0 to enable single-cycle operation with automatic shutdown. Configure Function Codes **P16.01 and P16.02 according to the total number of execution sections and time units respectively. Then set corresponding parameters including instruction values, operation duration, acceleration/deceleration times, etc., for each section. The driver will execute** from Section 1 through N-1, stopping after completing all cycles.

Table 4-29 Shutdown Description After a Single Run

pattern description	operation curve
Run 1 round; Automatic switching of segment number increment;	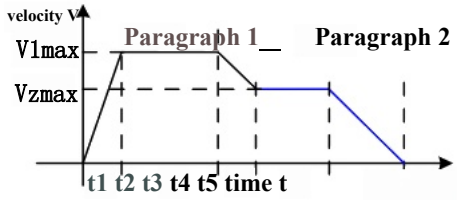 **V¹max and V²max: the speed of the first paragraph and the second paragraph;** **ti: actual acceleration and deceleration time in the first paragraph;** **t3, ts: the acceleration and deceleration time in the second period;** Running time of a section: the speed command of the previous section plus the time it takes to switch to the speed command of the section plus the time it takes to run at a constant speed in the section **When a segment's operation time (e.g., as shown in the diagram: the first segment runs for t1+S2, the second for t3+t4, and so on) is not set to zero, the driver will skip that speed command segment and proceed to the next one. The motor's actual rotational speed reaches the maximum operating speed set for that segment, triggering a valid speed arrival signal. If the servo enable is turned off during a segment's operation, the motor will stop according to the servo OFF shutdown procedure (H02-05).**

Note: A complete run of the driver at the preset speed task instruction set on P16.01 is called a complete run.

Running in cycles (P16.00=1)

Set function code P16.00 to 1 to activate the loop operation mode. After configuring function codes P16 .01 and P16.02 according to the total number of execution sections and time units respectively, set corresponding parameters such as instruction values, runtime duration, and acceleration/deceleration periods for each section. The module will execute commands segment by segment based on these settings. The driver will operate sequentially from Section 1 to N, automatically returning to Section 1 for re-looping after completing the final section.

Table 4-30 Circulation Operation Description

pattern description	operation curve
In the cycle operation, the starting number of each round is 1; the number of segments is automatically incremented and switched; **If the servo is effective, it will keep running in a cycle.**	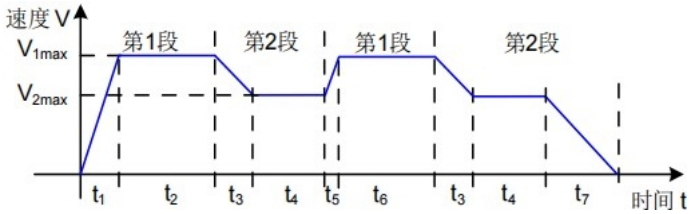 Vmax and V²max: maximum operating speed in paragraph 1 and paragraph 2; A running time: the speed command of the previous section is switched to the speed command of this section + the uniform running time of this section For example: The first segment in the diagram operates for t1+S2 duration, the second segment for t3+t4, and so on. If a segment's operating time is not set to zero, the driver will skip that speed command segment and proceed to the next one. When the motor's actual rotational speed reaches the maximum speed limit of the specified segment, the speed arrival signal becomes valid. During operation of a certain segment, if the servo enable is turned off, the motor will stop according to the servo OFF shutdown procedure (P04.12).

DI switch operation (P16.00=2)

Set the function code P16.00 to 2 and select the external DI switching mode. After configuring function codes P16.01 and P16.02 according to the number of execution segments and time units, set corresponding segment parameters including instruction values, operation duration, and acceleration/deceleration times as required. The driver will determine the speed command for the selected segment based on the external DI's ON/OFF configuration.

Table 4-31 DI Switching Operation Instructions

pattern description	operation curve
Servo can be operated continuously when it is effective; **The segment number is determined by the logic of the DI terminal;** **The running time of each speed instruction is determined only by the interval between the switc-hing of the segment number**	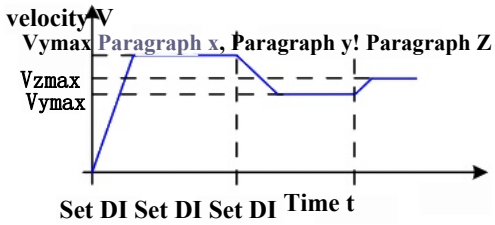 **X, y: segment number, the logical relationship between the segment number and DI terminal is as follows;** **A certain segment of time is not affected by the set value of the function code. During the operation of a certain speed instruction, if the segment number changes, it will immediately switch to the new segment number to run;** **The actual speed of the motor reaches the maximum operating speed set in this section, and the speed arrival signal is effective;** **During a run, the servo enable is OFF, and the motor stops according to the servo OFF stop mode (P04.12);**

When configuring multi-step operation mode for DI switching, the four DI terminals of the servo driver must be set to Function 27-30 (FunIN. 27-FunIN. 30 Multi-Step Operation Command Switching) with valid logic configuration. Additionally, one DI terminal should be configured to Function 20 (FunIN. 20: Speed Command Direction Selection) to switch the speed command direction.

function number	function name	description	remarks
FunIN. 20	Speed Directive direction selection	Invalid-Positive direction; Effective-reverse direction.	Only in the preset speed command DI mode, used to set the direction of the speed command:
FunIN. 27	Predefined instruction selection 1	The multi-section number is a four-bit binary number, and the correspondence between FunIN. 27~FunIN. 30 and the section number is shown in the following table.	
FunIN. 28	Predefined instruction selection 2		
FunIN 29	Predefined instruction selection 3		
FunIN. 30	Predefined instruction selection 4	The CMD value is 1 when the DI terminal input level is valid, otherwise it is 0	

FunIN. 30	FunIN. 29	FunIN. 28	FunIN. 27	segment number
0	0	0	0	1
0	0	0	1	2
...				
1	1	1	1	16

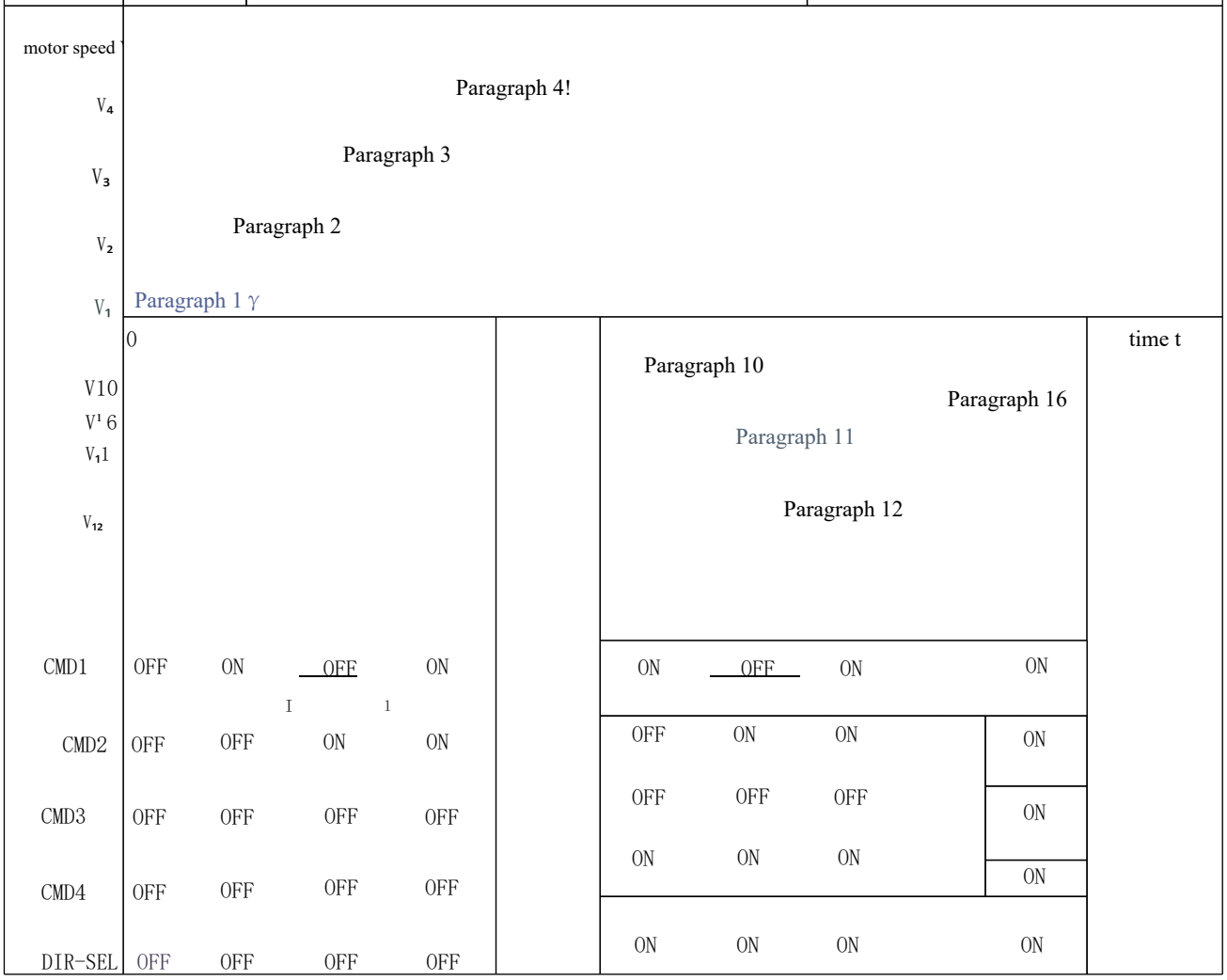

Figure 4-26 Example of Preset Speed Task Curve

② Preset speed task run curve setting

Taking the speed command in paragraph 1 as an example, the relevant function codes are as follows:

FC		name	Scope of the setting	unit	function	setting way	come into force time	leave the factory setting
P16	03	Speed up time 1	0~65535	ms	Set the acceleration and deceleration time of group 1	halt setting	immediately come into force	10
P16	04	Deceleration time 1	0~65535	ms		halt setting	immediately come into force	10
P16	09	Speed up time 4	0~65535	ms	Set the acceleration and deceleration time for group 4	halt setting	immediately come into force	150
P16	10	Deceleration time 4	0~65535	ms		halt setting	immediately come into force	150
P16	20	Speed Directive, paragraph 1	-6000~6000	rpm	Set the speed command value for paragraph 1	halt setting	immediately come into force	0
P16	21	Instruction run time in paragraph 1	0~6553.5	S (min)	Set the running time of instruction 1	halt setting	immediately come into force	5.0
P16	22	Acceleration and deceleration time in paragraph 1	0-Zero acceleration time 1-Acceleration time 1 2-Acceleration time 2 3-Acceleration time 3 4-Acceleration time 4	-	Select the acceleration and deceleration mode in paragraph 1	Shut down Settings	with immediate effect	0

In addition to the 1st to 16th segment instruction values and operation duration, preset speed task parameters provide four selectable acceleration/deceleration time options. The default configuration excludes these parameters. Taking a P16.01=1single cycle completion in the preset speed task as an example, the following details apply to actual acceleration/deceleration durations and operational timing:

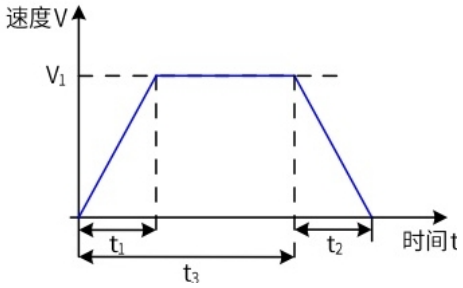

Figure 4-27 Example of Preset Speed Task Curve

As shown in the figure above, the speed command of this section is V1, and the actual acceleration time t1 is:

$$t_1 = \frac{V_1}{1000} \times \text{该段速度设置的加速时间}$$

Actual deceleration time S2:

$$t_2 = \frac{V_1}{1000} \times \text{该段速度设置的减速时间}$$

Running time: the speed time from the previous speed instruction to the speed instruction of this section + the uniform running time of this section, as shown in t3 in the figure.

3) Source of A/BDI switch

When the speed command selects "A/B switching" (function code P14. 00 = 3), the DI function FunIN. 23 must be assigned to the corresponding DI terminal. The input signal at this terminal determines whether the A command source input or the B command source input is currently valid.

Function number	Function name	description	remarks
FunIN. 23	Operation command switching	Invalid-The current instruction is A valid-the current instruction is B	

4) Communication Given

It means that when the function code P14.00 is set to 4, the speed instruction value comes from the function code P 20.52 setting value, and the function code P20.52 must be modified by communication, and the control panel is invisible.

FC		name	Scope of the setting	unit	function	Methodology	entry-into-force time	Factory Settings
P20	52	The bus gives a speed command	-9000. 000~9000. 000	rpm	Setting the speed command value for a given form of communication; precision is 0.001pm	Operating Settings	with immediate effect	0

2. Speed Direction Setting

The direction of speed command can be changed through DI. FunIN.20 is assigned to the corresponding DI terminal, and the direction of speed command can be determined according to the input signal on the DI terminal, so as to meet the requirements of speed command direction change.

Function number	Function name	description	remarks
FunIN. 20	Direction selection for speed instructions	Invalid-positive direction; Effective-reverse direction.	

The actual direction of motor operation is related to three factors: the selection of the running direction (P04 .01), the direction of speed command, and the switching of speed command direction DI (FunIN.20) . The actual running direction of the motor under speed control mode is set

P04. 01	Speed command positive and negative	FunIN. 20	Actual motor running direction
0	+	of no avail	anticlockwise
0	+	valid	clockwise
0		of no avail	clockwise
0		valid	anticlockwise
1	+	of no avail	clockwise
1	+	valid	anticlockwise
1	-	of no avail	anticlockwise
1		valid	clockwise

4.2.2.2 Slope function Settings

The slope function setting refers to the conversion of a speed command with high acceleration into a speed command with relatively gentle acceleration, that is, the purpose of acceleration control is achieved by setting the acceleration and deceleration time.

In the speed control mode, the acceleration of the speed command is too large, which will lead to motor jump or violent vibration. At this time, increasing the acceleration or deceleration time can achieve smooth speed change of the motor and avoid the above situation leading to mechanical damage.

pay attention to：

The speed instruction is given by the keyboard and analog voltage. When the speed is moved, the acceleration and deceleration time is set through function codes P14.08 and P14.09;

When the speed command is derived from a preset speed task, the acceleration and deceleration time are set by P16 group parameters. See Chapter 7 for details.

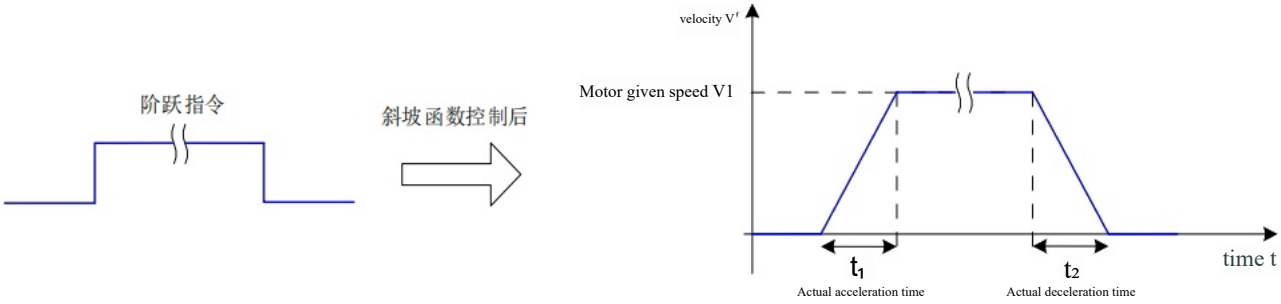

Figure 4-28 Schematic Diagram of Slope Function Definition

P14.08: Time for speed command to accelerate from 0 to 1000rpm.

P14.09: Time when speed command is reduced from 1000rpm to 0.

Therefore, the actual acceleration and deceleration time calculation formula is as follows:

$$\text{实际加速时间 } t_1 = \frac{\text{速度指令}}{1000} \times \text{速度指令加速斜坡时间}$$

$$\text{Actual deceleration time } t_2 = \frac{\text{速度指令}}{1000} \text{ Time of speed command deceleration slope}$$

FC		name	Scope of the setting	unit	function	Meth-odology	entry-into-force time	Factory Settings
P14	08	Speed instruction acceleration slope time	0~65535	ms	Used to set the acceleration and deceleration time values of speed instructions in speed mode except for multi-stage speed instructions	Operat-ing Sett-ings	with imme-diate effect	0
P14	09	Speed instruction deceleration slope time	0~65535	ms		Operating Settings	with imme-diate effect	0

4.2.2.3 Zero Bit Lock Function

pay attention to：

The zero lock function is used in the speed control mode when the host computer device does not construct a position ring system.

If the servo motor oscillates in the zero position locking state, the position loop gain can be adjusted.

The zero-position locking function operates in speed control mode. When the zero-position locking DI signal FunIN.6 (zero-speed hold) is active, if the speed command amplitude falls below or equals the preset value of P14.10, the servo motor enters a zero-position locking state. During this phase, the servo driver generates a position loop that invalidates the speed command. The motor remains locked at its zero-position within ±1 pulse duration of the lock-up signal. This ensures the motor stays fixed at the zero position even if external forces cause movement.

If the speed command amplitude exceeds P14.10+10rpm (P14.10+20 rpm when exceeding 100 rpm), the servo motor exits the zero-position lockout state and continues operating based on the current input speed command. If the zero-position lockout DI signal FunIN. 6 (zero-speed hold) is invalid, the zero-position lockout function remains inactive.

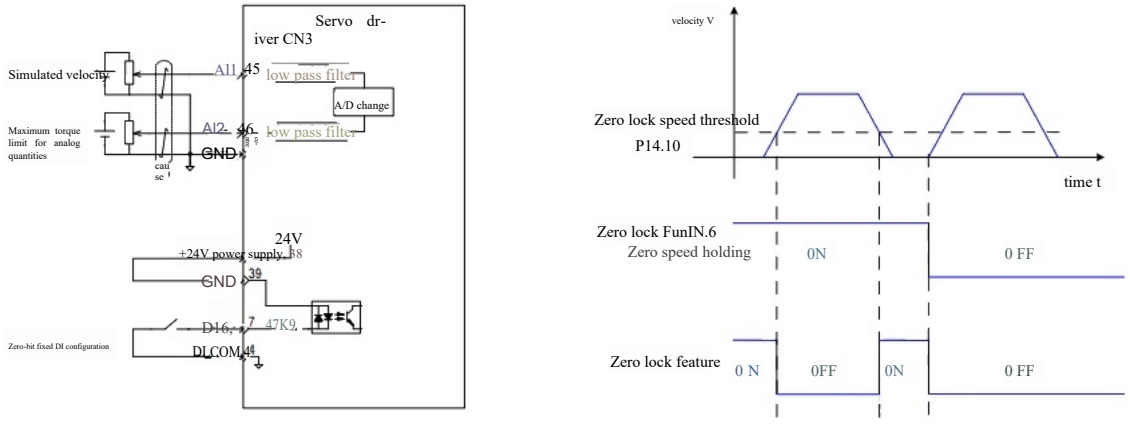

Figure 4-29 Zero Bit Lock Related Wiring and Waveform Diagram

FC		name	Scope of the setting	unit	function	Meth-odology	entry-into-force time	Factory Settings
P14	10	Zero lock speed threshold	0~6000	rpm	Set the speed threshold for zero speed lock	Opera-ting Se-ttings	with immedi-ate effect	10

Function number	Function name	description	remarks
FunIN. 6	Zero speed holding	Effective-enables the zero bit lock function; Invalid-disable the zero bit lock function.	

4.2.2.4 Speed limit

pay attention to :

When the actual speed of the motor exceeds the overspeed fault threshold P08.03, the driver will generate E.416 (motor overspeed). For the setting of P08.03, please refer to Chapter 7 Parameter Details. The speed command limit value must be less than P08.03.

In speed control mode, the servo driver can limit the size of the speed command. The sources of speed command limitation include:

P14.03: Set the amplitude limit of the positive and negative direction speed command. If the positive and negative direction speed command exceeds this set value, it will be limited to that value.

P14.04: Set a positive speed threshold, and any positive speed command exceeding this setting will be limited to that value.

P14.05: Set the reverse speed threshold, and any negative direction speed command exceeding this setting will be limited to that value.

Maximum motor speed (default limit point): depends on the actual motor model used.

The actual motor speed limit range satisfies:

Amplitude of the positive speed command ≤ min{maximum motor speed, P14.03, P14.04}

The amplitude of the negative speed command is ≤min{maximum motor speed, P14.03, P14.05}

FC		name	Scope of the setting	unit	function	Methodology	entry-into-force time	Factory Settings
P14	03	Maximum rotational speed limit	0~60000	rpm	Set the maximum rotational speed limit	Operating Settings	with immediate effect	10000
P14	04	Speed forward limit	0~60000	rpm	Set a positive speed limit	Operating Settings	with immediate effect	10000
P14	05	Speed reverse limit	0~60000	rpm	Set the reverse speed limit value	Operating Settings	with immediate effect	10000

4.2.2.5 Velocity-Related DO Output

After filtering, the speed feedback value can be compared with different thresholds and DO signal can be output for use by the upper computer. The corresponding filter time parameter is set by P07.76.

1. Motor motion signal DO output

When the absolute value of the filtered motor's actual rotational speed reaches P14.12 (the motor motion status threshold), it can be determined that the motor is in motion. At this point, the servo driver can output a motor motion confirmation signal (FunOUT.5: Motor Motion) to verify that the motor has started moving. Conversely, if the absolute value of the filtered motor's actual rotational speed falls below P14.12, it indicates that the motor has not been moved.

The determination of the motor motion (FunOUT. 5: Motor Motion) signal is not affected by the driver's operating status and control mode.

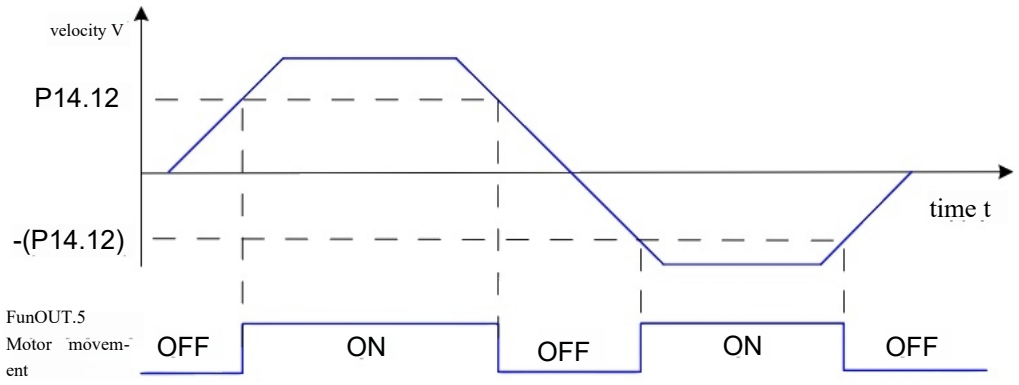

Figure 4-30 Motor Motion Signal Waveform

pay attention to：

In the figure above, ON represents the valid DO signal of the motor movement, and OFF represents the invalid DO signal of the motor movement.

FC		name	Scope of the setting	unit	function	Meth-odology	entry-into-force time	Factory Settings
P14	12	Motor motion state threshold	0~1000	rpm	Set the threshold of motor motion signal determi-nation	Opera-ting Se-ttings	with immedi-ate effect	20

When using the motor motion signal output function, one DO terminal of the servo driver should be assigned to the DO function (FunOUT. 5: Motor Motion), and the valid logic of the DO terminal should be determined.

Function number	Function name	description	remarks
FunOUT. 5	Motor movement	Invalid, the absolute value of motor speed after filtering is less than function code P14.12 set value valid, the absolute value of motor speed after filtering reaches function code P14.12 set value	

2. Speed Signal DO Output

In speed control mode, when the absolute deviation between the filtered actual rotational speed of the servo motor and the speed command meets a specified threshold (P14.13), it is determined that the motor's actual speed has reached the set target value. At this point, the driver can output a speed synchronization signal (FunOUT.7: Speed Synchronization). Conversely, if the absolute deviation exceeds this threshold, the speed synchronization signal becomes invalid.

When the driver is in a non-running state or in a non-speed control mode, the speed consistent (FunOUT. 7: Speed Consistent) signal is always invalid.

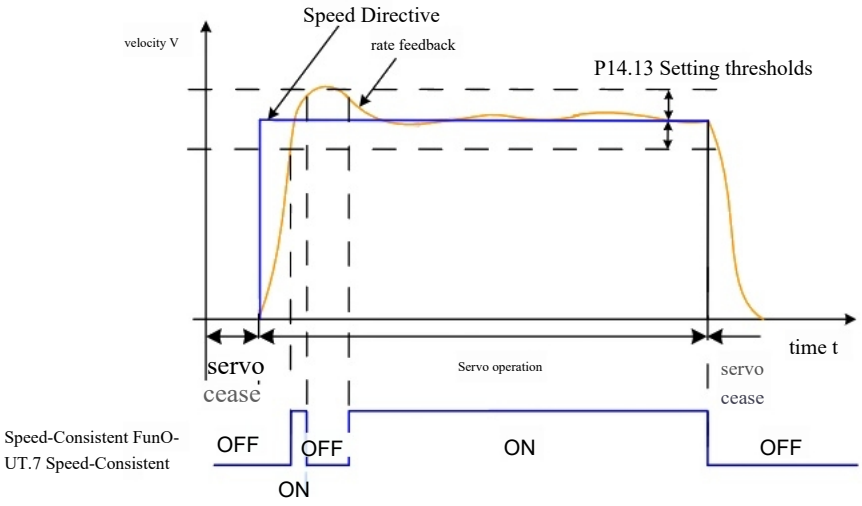

Figure 4-31 Velocity Consistent Signal Waveform

pay attention to：

In the figure above, ON represents that the speed consistent DO signal is valid, and OFF represents that the speed consistent DO signal is invalid.

FC		name	Scope of setting	unit	function	Meth-odology	entry-into-force time	Factory Settings
P14	13	Speed, signal width	0~100	rpm	Set the signal width at a consistent rate	Opera-ting Se-ttings	with immedi-ate effect	10

When using the speed consistency signal output function, one DO terminal of the servo driver should be assigned as the DO function (FunOUT.7: speed consistency), and the valid logic of the DO terminal should be determined.

Function number	Function name	description	remarks
FunOUT. 7	Speed is consistent	Invalid, the absolute value of the deviation between the actual speed of the motor after filtering and the speed command is greater than function code P14.13 valid, the absolute value of the deviation between the actual speed of the motor after filtering and the speed command is not greater than function code P14.13	

3. Speed Reaches Signal DO Output

When the absolute value of the filtered servo motor's actual rotational speed exceeds a predetermined threshold (P14.14), it is determined that the actual speed has reached the desired value. At this point, the servo driver can output a speed arrival signal (FunOUT.8: Speed Arrival). Conversely, if the absolute value of the filtered servo motor's actual rotational speed does not exceed this threshold, the speed arrival signal becomes invalid.

The determination of the speed arrival (FunOUT.8: speed arrival) signal is not affected by the operating status and control mode of the driver.

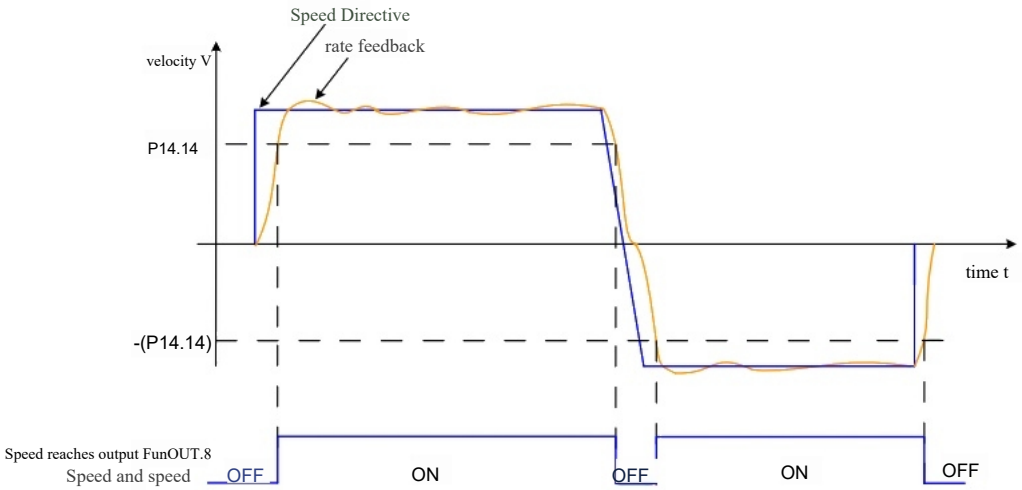

Figure 4-32 Velocity Arrival Signal Waveform

pay attention to：

In the figure above, ON represents that the speed reaches DO signal is valid, and OFF represents that the speed reaches DO signal is invalid.

FC		name	Scope of the setting	unit	function	Meth-odology	come into force time	Factory Settings
P14	14	Speed reaches signal threshold	10~6000	rpm	**Set the speed to the signal threshold**	Operating Settings	with immediate effect	1000

When using the motor motion signal output function, one DO terminal of the servo driver should be assigned to the DO function (FunOUT. 8: VArr, speed arrival), and the valid logic of the DO terminal should be determined.

Function number	Function name	description	remarks
FunOUT8	Speed and speed	Invalid, the absolute value of the motor speed feedback after filtering is greater than function code P14.14 valid, the absolute value of the motor speed feedback after filtering is not greater than function code P14.14	

4. Zero speed signal DO output

When the absolute value of the actual rotational speed of a servo motor falls below a specific threshold (P 14.15), it is considered to be near stationary. In this case, the servo driver can output a zero-speed signal (FunOUT.6: Zero-Speed Signal). Conversely, if the absolute value of the actual rotational speed does not exceed this threshold, the motor is deemed non-stationary, rendering the zero-speed signal invalid.

Zero speed (FunOUT. 6: Zero speed signal) The determination of the signal is not affected by the operating status and control mode of the driver.

When the speed feedback is disturbed, it can be filtered out by the speed feedback DO filter, and the corresponding filter time parameter is set by P07.76.

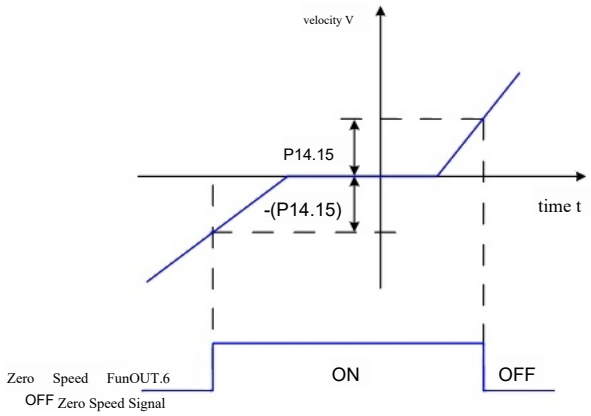

Figure 4-33 Zero Speed Signal Waveform

pay attention to：

In the figure above, ON represents that the zero speed DO signal is valid and OFF represents that the zero speed DO signal is invalid.

FC		name	Scope of setting	unit	function	Meth-odology	entry-into-force time	Factory Settings
P14	15	Zero speed output signal threshold	1~6000	rpm	Set the zero speed output signal determination threshold	Opera-ting Se-ttings	with immedi-ate effect	10

When using the zero speed signal output function of the motor, one DO terminal of the servo driver should be assigned as DO Function 3 (FunOUT. 6: Zero speed signal), and the valid logic of the DO terminal should be determined.

Function number	Function name	description	remarks
FunOUT. 6	Zero speed signal	Invalid, the speed feedback difference of the motor is greater than the set value of function code P14.15 is valid, when the speed feedback difference of the motor is not greater than the set value of function code P14.15	Output signal when servo motor stops rotating

4.2.3 Torque Control Mode

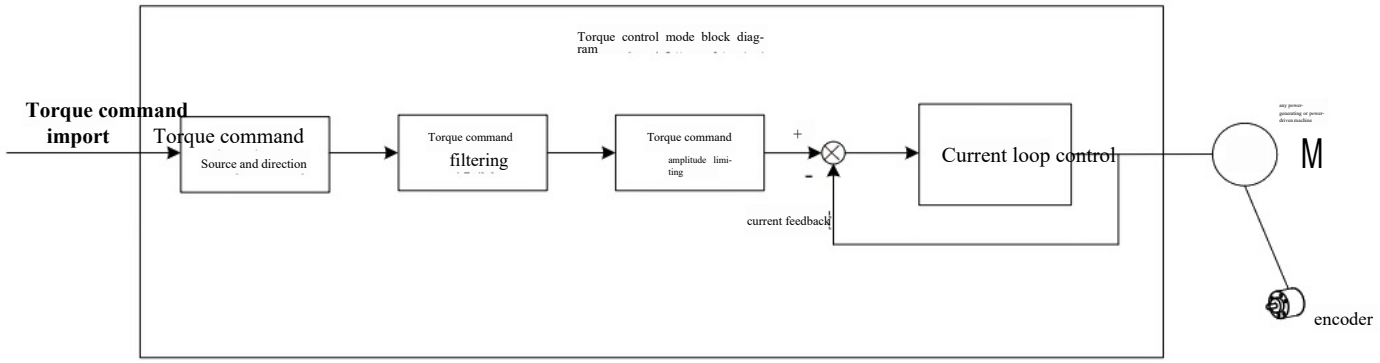

Figure 4-34 Torque Control Block Diagram

Set the value of parameter P04.00 to 2 through the servo driver panel or the Grandeur drive debugging platform, and the servo driver will work in torque control mode.

Set the parameters of the servo driver according to the mechanical structure and indicators. The following describes the basic parameters when using the torque control mode.

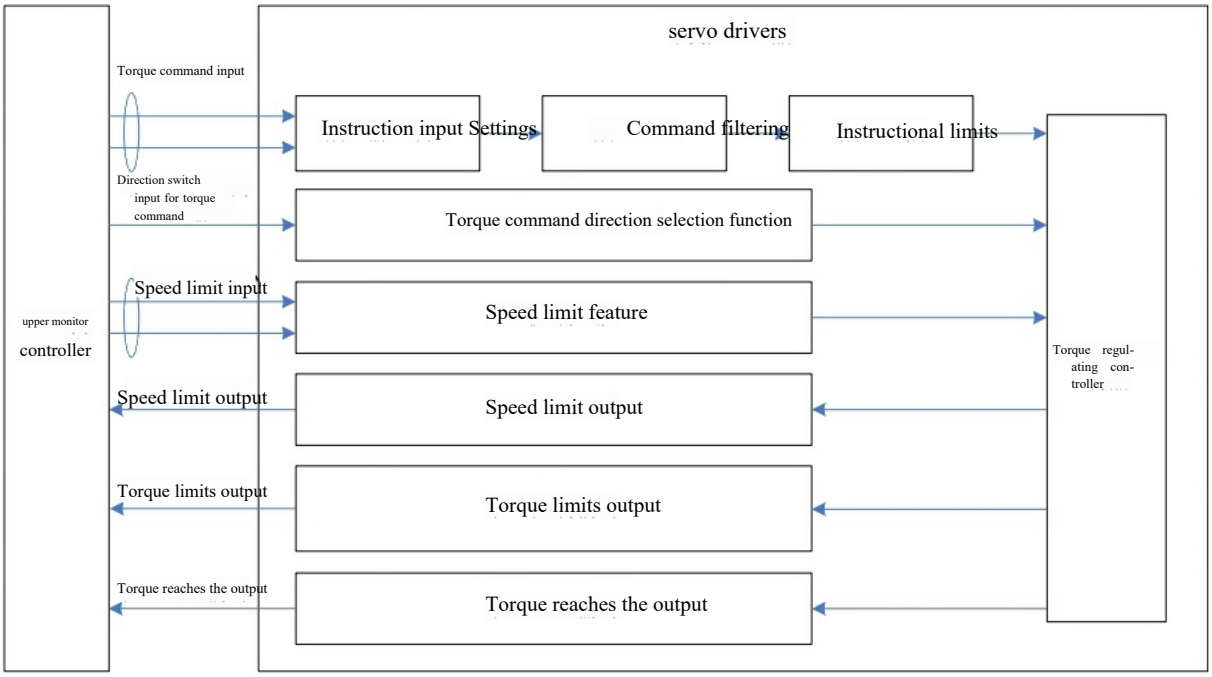

Figure 4-35 Signal Interaction Between Servo Driver and Host Computer

4 2.3.1 Torque Command Input Setting

1. The source of the command is called the pivot

The torque control mode has the following five ways to obtain torque commands, which can be set through function code P15.00.

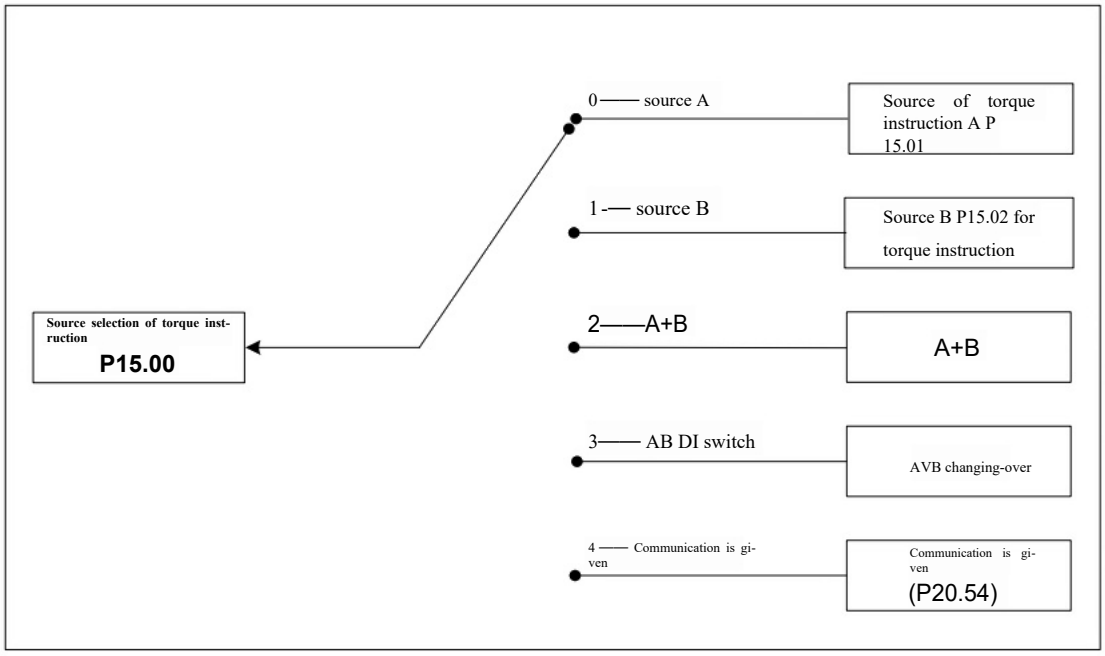

Figure 4-36 Torque Command Source Diagram

FC		name	Set the scope	unit	function	setting way	come into force time	leave the factory setting
P15	00	Source selection of torque instruc-tion	0 - source A 1 - source B 2 - source A+B 3-Source A/B DI switch 4-Communication given		Select the torque command source	Shut down setting	with immedi-ate effect	0

1) Source of Torque Command A

The torque command source A includes two forms of commands: keyboard given and analog voltage given. The keyboard given is the internal torque command, and the analog voltage given is the external torque command.

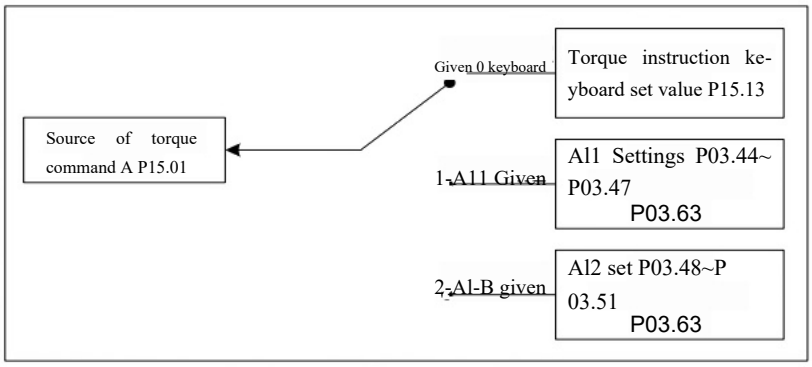

Figure 4-37 Source A Description of the Torque Transfer Command

FC		name	Scope of the setting	unit	function	setting way	come into force time	leave the factory setting
P15	01	Source of torque command A	0-Keyboard given (P15.13) 1-AI1 given 2-AI2 given	-	Select the torque instruction source A	Shut down Settings	with immediate effect	0

① Keyboard given

Refers to the percentage of the command torque relative to the motor's rated torque, which is set by function code P15.13.

FC		name	Scope of the setting	unit	function	setting way	come into force time	leave the factory setting
P15	13	Torque command keyboard setting	-300.0~300.0	%	The internal torque command is set to a value with an accuracy of 0.1%.	move setting	immediately come into force	0

② Given simulated voltage

Refers to the analog voltage signal output by the upper computer or other equipment, which is processed as a torque command.

Analog voltage input terminal

The servo driver has two analog input channels: AI1 and AI2, with a maximum input voltage of ± 10Vdc and an input impedance of about 9kΩ. Analog input circuit:

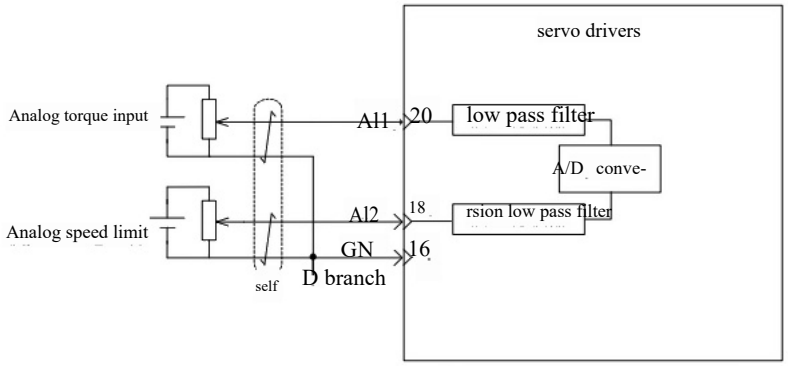

method of operation：

Take AI1 as an example to illustrate the analog voltage setting torque instruction method.

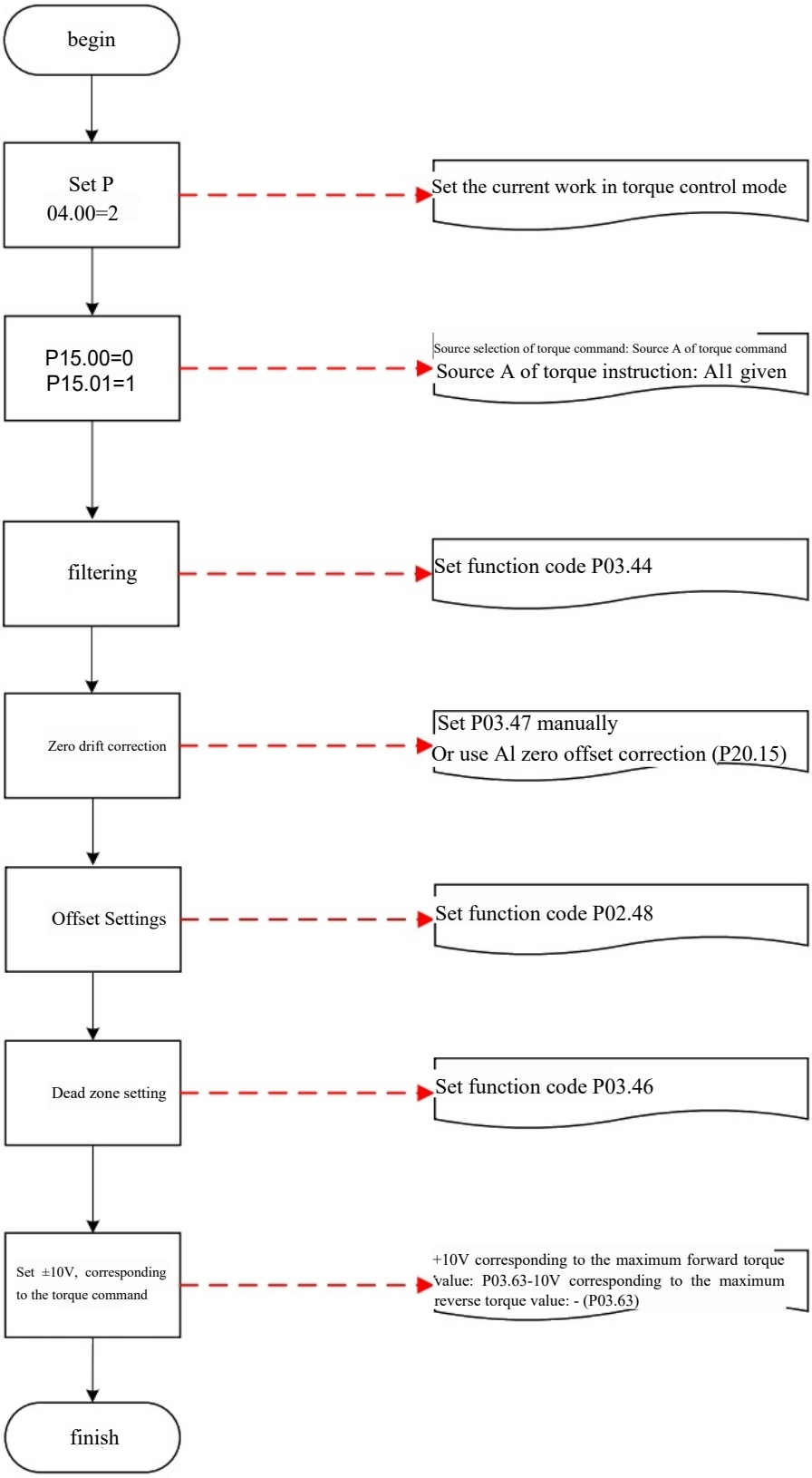

Figure 4-38 Schematic Diagram of Analog Voltage Torque Command Operation

Zero drift: refers to the value of the sampling voltage of the servo driver relative to GND when the input voltage of the analog channel is zero.

Offset: refers to the input voltage value of the analog channel corresponding to zero when the sampling voltage is zero after zero drift correction.

Dead zone: refers to the input voltage range of the corresponding analog channel when the sampling voltage is zero. The unprocessed output voltage of the analog channel is shown in Figure 4-39y1. After internal processing by the servo driver, the torque command y6 is finally obtained.

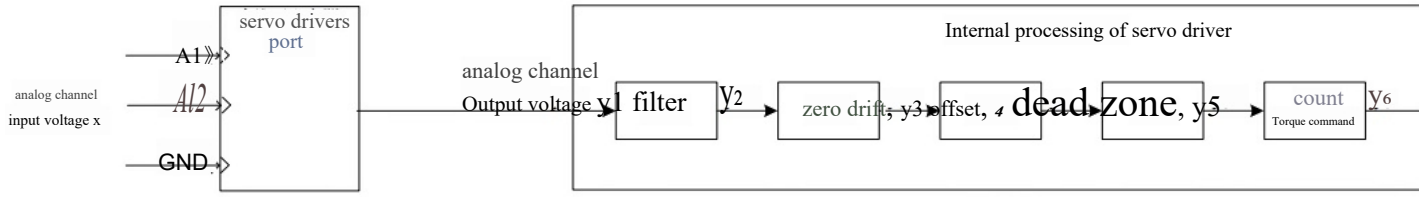

Figure 4-39 Servo Driver AI Processing Flow

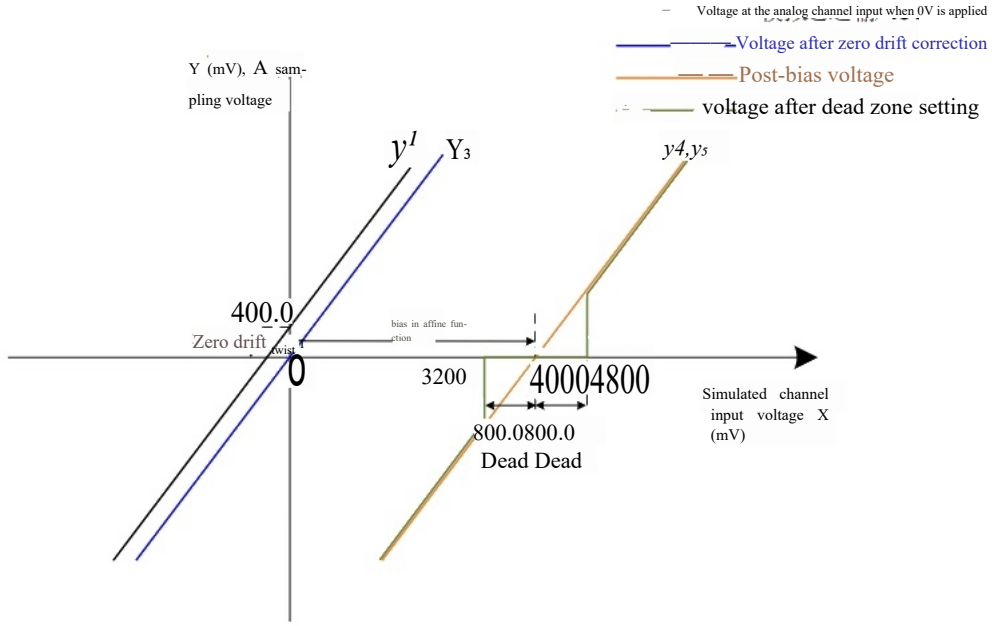

Figure 4-40 Examples of Servo Driver AI Processing Corresponding Sampling Voltage

filtering：

The servo driver provides analog channel filtering function. By setting the filter time constant P03.44, it can prevent the motor command fluctuation caused by unstable analog input voltage, and also weaken the motor error action caused by interference signals. The filtering function has no effect on eliminating or suppressing zero drift and dead zone.

Zero floating correction:

When the actual input voltage is 0V, the output voltage of the analog channel deviates from 0V.

In the figure, the analog channel output voltage not processed internally by the driver is shown as y1. Taking the filter time constant P03.44=0.00ms as an example, the filter

After sampling, the voltage y2 is the same as y1.

It can be seen that when the actual input voltage x=0, the output voltage y1=400.0mV, which 400.0mV is called zero drift.

Manual setting of P03:0.47=400.0 (mV). After zero drift correction, the sampling voltage is shown as y3. y3=y1-400.0

Zero drift can also be corrected automatically through the simulated path automatic adjustment function (P20.15).

Bias Settings:

Set the actual input voltage corresponding to the sampling voltage of 0.

As shown in the figure, when the preset sampling voltage y3=0, the corresponding actual input voltage x=4000mV, which is called the bias.

Manual setting P02.48=4000 (mV). After biasing, the sampling voltage is shown as y4. y4=y3-4000

dead-space correction：

The effective input voltage range when the sampling voltage of the limiting driver is not 0.

After the offset setting is completed, when the input voltage x is within 3200mv and 4800mv, the sampling voltage value is 0. This 800.0mV is called the dead zone. After setting P03.46=800, the sampling voltage is shown as y5 after dead zone correction.

$$y_5 = \begin{cases} 0 & 3200 \leqslant x \leqslant 4800 \\ y_4 & 4800 < x \leqslant 10000 \text{或} -10000 \leqslant x < 3200 \end{cases}$$

Calculate the torque command:

After zero drift, bias and dead zone are set, the torque command value corresponding to 10V (10000mV) in the current sampling voltage should be set through P03.63, and the actual torque command y6:

$$y_6 = \frac{y_5}{10000} \times (P03.63)$$

This value will be given as the analog torque command of the torque control mode.

As shown in Figure 4-4-1 (left) for non-biased conditions and Figure 4-4 1 (left) for biased conditions, the AI1 sampling voltage value can be viewed in real-time via P09.22 after proper configuration, and the input analog torque command value can also be checked through P 09.22.

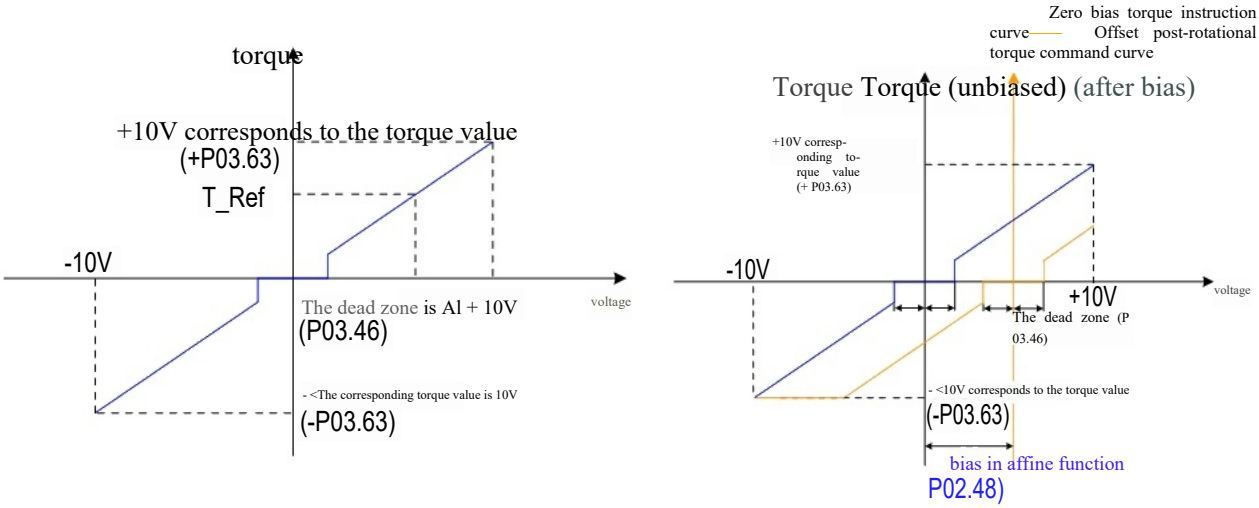

Figure 4-41 Schematic Diagram of Unbiased AI2 (left) and Biased AI2

(right) Relationship Between the Final Torque Command Value Y6 and Input Voltage X:

$$y_6 = \begin{cases} 0 & B-C \leqslant x \leqslant B+C \\ (x-B) \times \dfrac{P03.63}{10} & B+C < x \leqslant 10000 \text{或} -10000 \leqslant x < B-C \end{cases}$$

Among them: B: bias; C: dead zone.

FC		name	Scope of the setting	unit	function	Meth-odology	entry-into-force time	Factory Settings
P02	48	AI1 offset voltage	-10000～10000	mV	Set the analog bias value of AI1 channel	Operat-ing Sett-ings	with immediate effect	0
P03	44	AI1 input filter time	0~655.35	ms	Set the filter time constant of the analog average value of AI1 channel	Operat-ing Sett-ings	with immediate effect	2.00
P03	46	AI1 dead zone	0~1000.0	mV	Set the analog dead zone value of AI1 channel	Operat-ing Sett-ings	with immediate effect	10.0
P03	47	AII drift	-500.0~500.0	mV	Set the analog zero drift value of AI1 channel	Operat-ing Sett-ings	with immediate effect	0.0
P03	63	Simulated 10V corresponds to torque	1.000 to 8.00 times rated torque	ti-mes	Set the analog 10V corresponding to the torque value	Shut down Settings	with immediate effect	1.00
P20	15	AI zero offset correction	0-No operation 1-AI1 adjust-ment 2-AI2 adjustment	–	Simulated AI1 and AI2 channels enable zero drift auto-correction	Shut down Settings	with immediate effect	0

Note: When the analog AI2 input channel is selected, the setting method is similar to that described above for analog Al1. For related function codes, refer to Chapter 7.

2) Source of Torque Command B

Source B of torque command usage is the same as source A of main torque command. For details of parameters, see Chapter 7.

3) A/B Switch Source

When the torque command is selected as "A/B switch" or function code P15.00=3, it is necessary to assign DI function FunIN.23 to the corresponding DI terminal, and the input signal on this DI terminal determines whether the current A command source input is valid or the B command source input is valid.

Function number	Function name	description	remarks
FunIN.23	Operation command switc-hing	OFF-The current running instruction is A ON-The current running instruction is B	

4) Communication Given

It means that when the function code P15.00 is set to 4, the torque instruction comes from the set value of the function code P20.54, and the function code P20.54 must be modified by communication, and the control panel is invisible.

FC		name	Scope of setting	unit	function	setting way	come into force time	leave the factory setting
P20	54	The bus gives a torque command	-100.000~100.000	%	Set the torque command value in the given form of communication; its accu-racy is 0.001%.	move setting	immediat-ely come into force	

2. Torque Command Direction Setting

The direction of torque command can be switched by means of DI terminal. FunIN.19 of DI function is assigned to the corresponding DI terminal, and the direction of torque command can be determined according to the input signal on the DI terminal, so as to meet the requirements of torque command direction switching.

Function number	Function name	description	remarks
FunIN. 19	Switch the direction of the torque command	Invalid-the actual torque command direction is the same as the set direction valid-the actual torque command direction is opposite to the set direction	

The actual motor direction of motion is related to three things: the direction of motion selection (P0 4.01), the direction of torque command, and the switching of torque command direction DI (FunIN.19) .

Table 4-32 Actual Motion Direction Setting of Motor Under Torque Control Mode

P04. 01	Positive and negative torque instructions	FunIN. 19	Actual motor direction of motion
0	+	of no av-ail	anticlockwise
0	+	valid	clockwise
0		of no av-ail	clockwise
0		valid	anticlockwise
1	+	of no av-ail	clockwise
1	+	valid	anticlockwise
1		of no av-ail	anticlockwise
1		valid	clockwise

4 2.3.2 Torque Command Filtering

pay attention to：

If the filter time constant is set too large, the responsiveness will be reduced. Please set the filter time constant while confirming the responsiveness!

Position, speed, torque and hybrid control mode, the servo driver can achieve low pass filter of torque command, so that the command is smoother and vibration is reduced.

The servo driver provides two low-pass filters for torque commands, with filter 1 in default use;

Using the gain switching function (P06.15=1 and P06.16=0), when the P06.16 setting condition is met, it can be switched to filter 2.

FC		name	Scope of the setting	unit	function	Meth-odology	entry-into-force time	Factory Settings
P07	02	Torque filter 1	0~30.00	ms	Set the low-pass filter time constant of the first group torque command	Operat-ing Sett-ings	with immediate effect	0.79
P07	03	Torque filter 2	0~30.00	ms	Set the low-pass filter time constant of the second group torque command	Operat-ing Sett-ings	with immediate effect	0.79

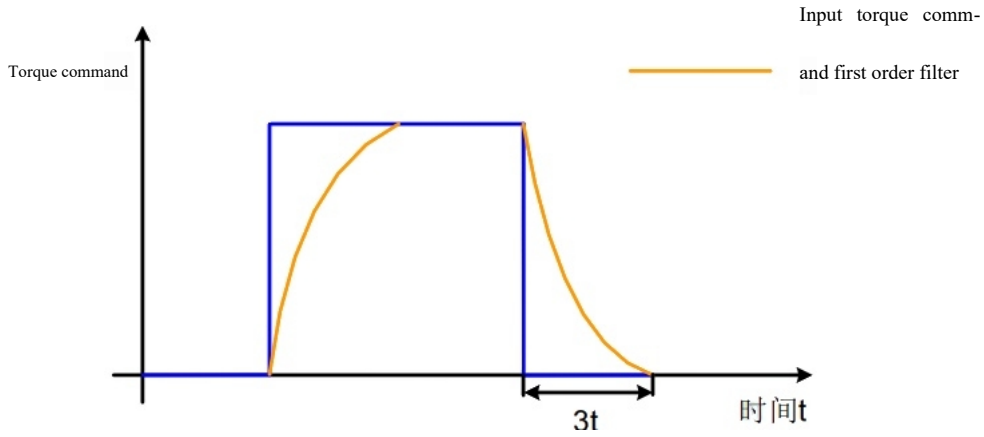

Figure 4-42 Schematic Diagram of First-Order Filter for Rectangular Torque Command

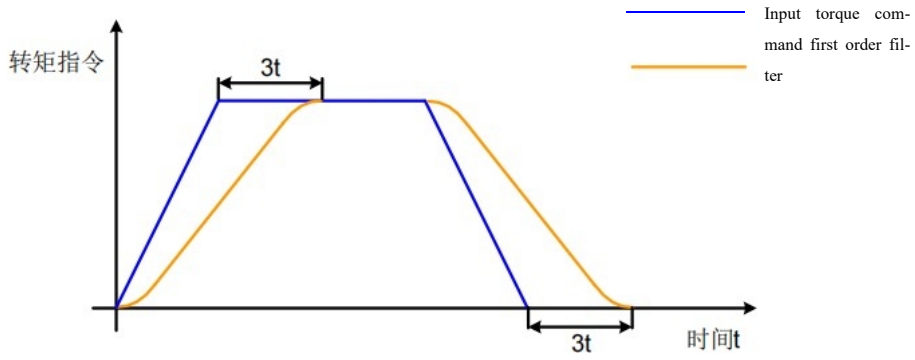

Figure 4-43 Trapezoidal Torque Instruction 1st Order Filter Schematic Diagram

4.2.3.3 Torque Command Limit

The torque command is valid in position control, speed control, torque control and mixed control mode, and must be set! To protect the driver and motor, the torque command should be limited.

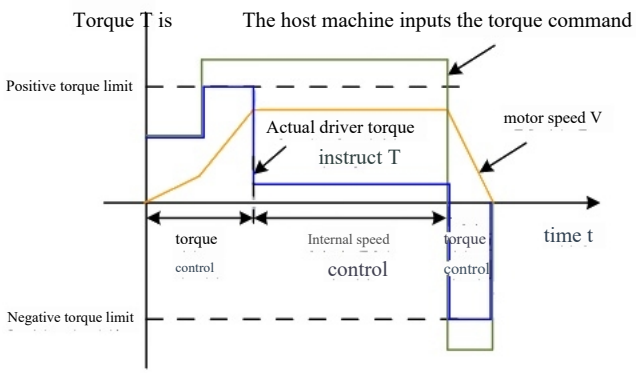

Figure 4-44 Torque Given and Torque Limit

When the absolute value of the torque command input from the host computer or output from the speed regulator exceeds the torque command limit, the actual driver's torque command is limited to the torque command limit value. Conversely, it equals the torque command value input from either the host computer or the speed regulator. At any given moment, only one torque limit value is valid. Both positive and negative torque limits must not exceed the maximum torque of the driver and motor, nor shall they fall below ±300.0% of the rated torque.

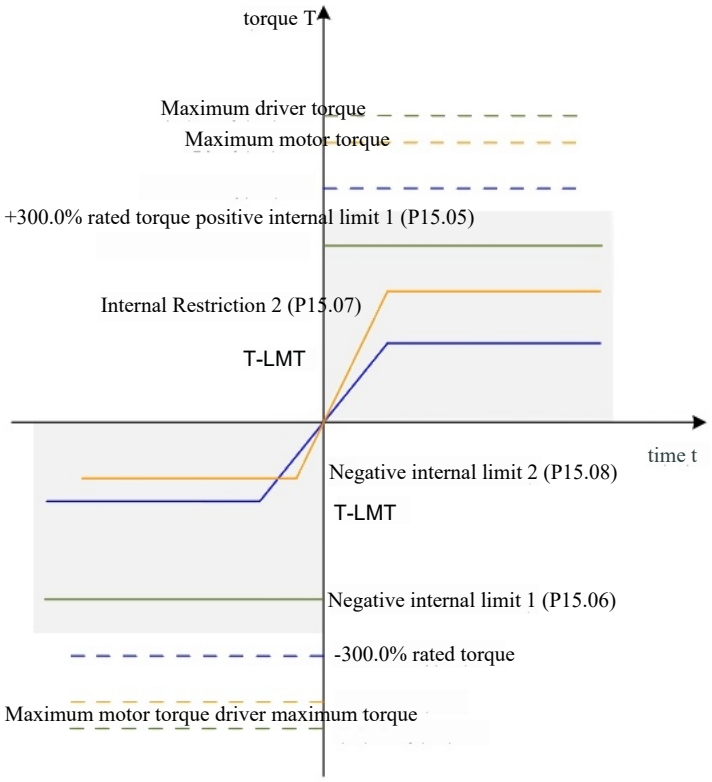

Figure 4-45 Torque Limit Example

1. Set Torque Limit Source

The torque limit setting can be configured via function code P15.03. Once established, the driver's torque command will remain within this threshold. When the limit value is reached, the motor will operate at its rated torque. This threshold should be determined according to actual load requirements. Under-sets may impair the motor's acceleration/deceleration performance, while constant torque operation might result in the motor failing to achieve the required rotational speed.

FC		name	Scope of the setting	unit	function	Meth-odology	entry-into-force time	Factory Settings
P15	03	Source selection of torque limit	**0-Internal torque limit 1** **1-External AI Limitation 2-DI Switching Internal Torque Limit Value 1 and Limit Value 2 3-DI Switching Internal Torque Limit Value 1 and External AI Limitation 4-Minimum value of internal torque limit value 1 and external AI Limitation**		Select the source of torque limit	Shut down Settings	with immediate effect	0

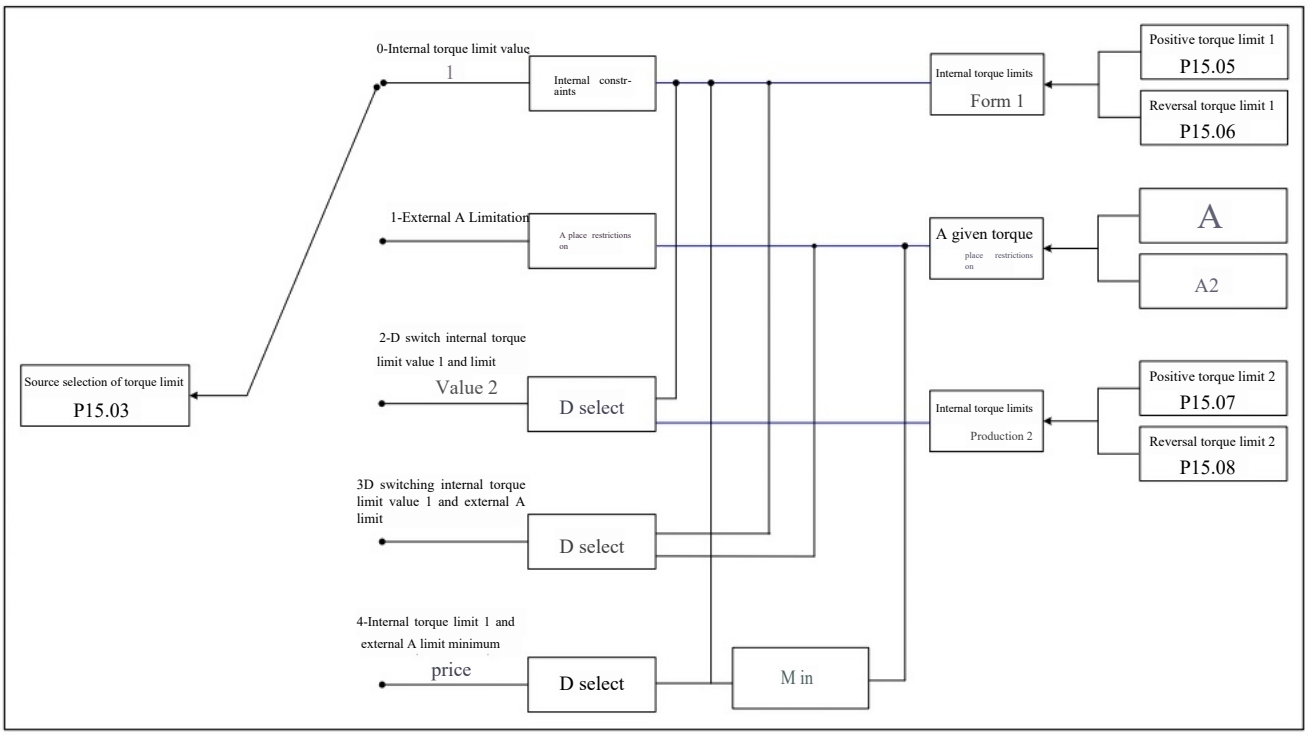

Figure 4-46 Sources of Torque Limit

The following diagram shows that the absolute value of the torque command input by the host computer is greater than the absolute value of the torque limit value under the torque mode.

1) P15.03=0: Internal torque limit

The limit value of the torque instruction is determined only by the internal function codes P15.05 and P15.06.

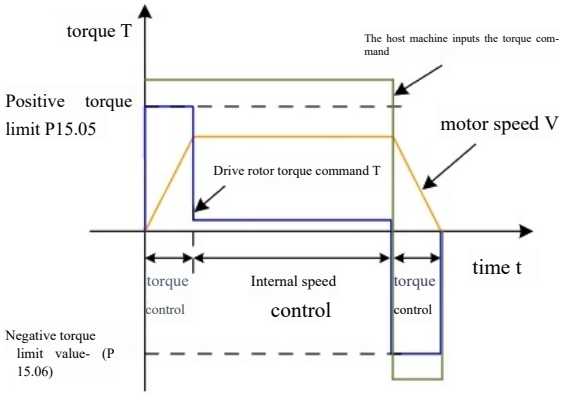

Figure 4-47 P15.03=0 Torque Limit Curve Diagram

2) P15.03=1: External AI restrictions

After selecting the external analog channel according to P15.04, the torque limit value is determined by the torque value corresponding to the AI terminal input voltage.

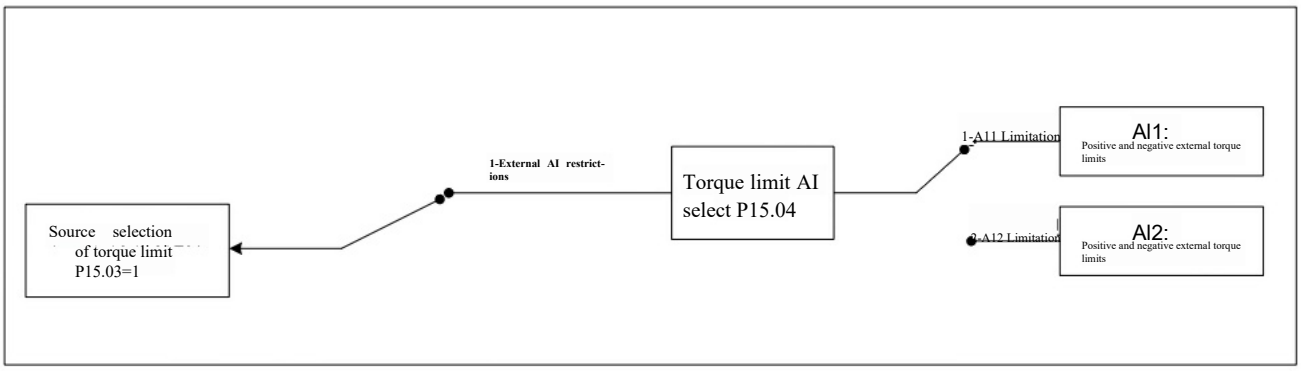

Figure 4-48 P15.03=1 Torque Limit Source

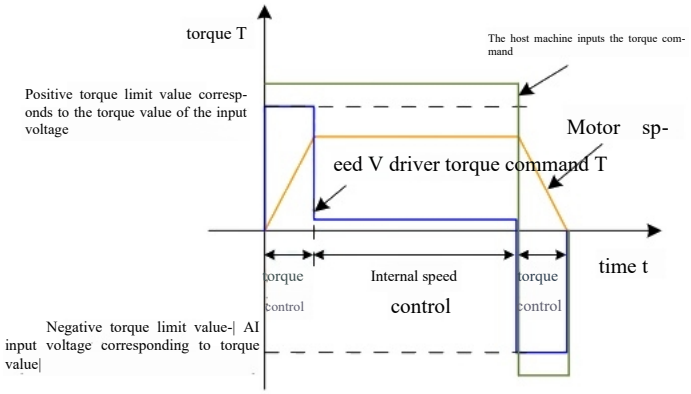

Figure 4-49 P15.03=1 Torque Limit Curve Diagram

For the simulation of AI1 and AI2 input terminals, please refer to Chapter 7 to set the relationship between torque and analog voltage.

3) P15.03=2: DI Switching Internal Torque Limits 1 and 2

The torque limit value is selected based on the logical status of the external DI signal. The positive torque limit value is selected between function codes P15.05 and P15.07, while the negative torque limit value is selected between function codes P15.06 and P15.08.

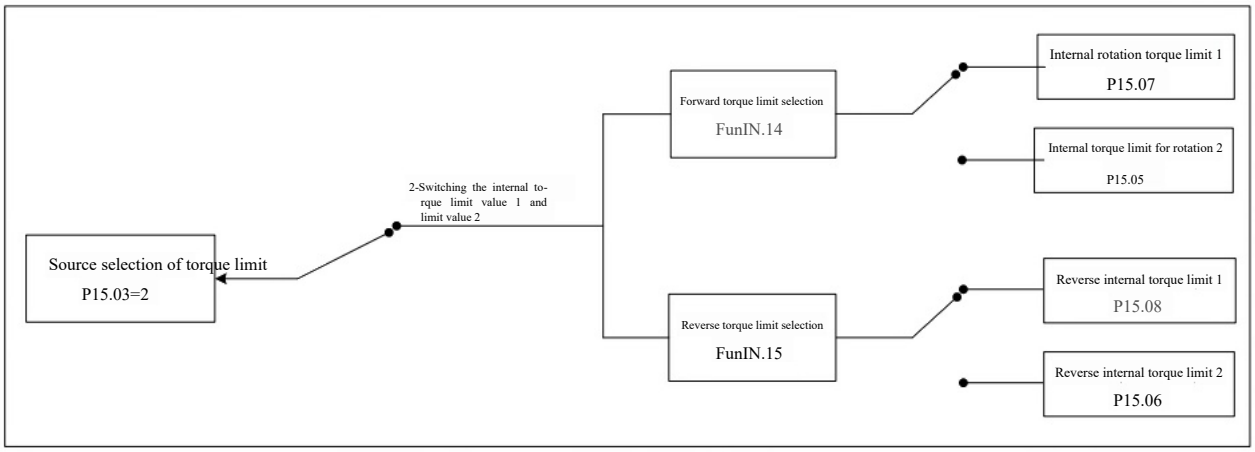

Figure 4-50 P15.03=2 Torque Limit Sources

Table 4-33 P15.03=2 Illustrates

DI functional status		FunIN. 14 Positive torque limit selection	
		OFF	ON
FunIN.15 Reverse to-rque limit selection	OFF	The positive torque limit is set by P15.05 and the negative torque limit is set by P 15.06	The positive torque limit is set by P15.07 and the negative torque limit is set by P 15.06
	ON	The positive torque limit is set by P15.05 and the negative torque limit is set by P 15.08	The positive torque limit is set by P15.07 and the negative torque limit is set by P 15.08

At this time, the two DI terminals assigned to the driver are FunIN. 14 (forward torque limit selection) and FunIN. 15 (reverse torque limit selection), and the logic of the DI terminal is determined.

Function number	Function name	description	remarks
FunOUT14	Forward torque limit selection	According to the selection of P15.03, the switching of torque limiting sources is performed. P15.03=2 when: Effective-Positive rotation external torque limit is effective; ineffective-Positive rotation internal torque limit is effective. P15.03=3 and AI limit value is greater than positive rotation external limit value: Effective-positive external torque limit is valid; ineffective-AI torque limit is valid. P15.03=4 when: Effective-AI torque limit is valid; ineffective-positive internal torque limit is valid.	
FunIN. 15	Reverse torque limit selection	According to the selection of P15.03, the torque limiting source is switched. P15.03=2 when: Effective-Reverse external torque limit effective; ineffective-Reverse internal torque limit effective. P15.03=3 and AI limit value is less than reverse external limit value: Effective-Reverse external torque limit effective. Ineffective-AI torque limit effective. P15.03=4 when: Effective-AI torque limit is valid; invalid-reverse internal torque limit is valid.	

4) P15.03=3: DI Switching Internal Torque Limit 1 and External AI Limit

Torque limit: After selecting the external analog channel according to P15.04,

When the external DI signal (FunIN. 14) is logically invalid, the forward torque limit value is determined by function code P15.05;

When the external DI signal (FunIN. 14) is logically valid, the positive torque limit value is determined by the torque value corresponding to the input voltage at the AI terminal. Negative torque limit: After selecting the external analog channel according to P 15.04,

External DI signal FunIN. 15) When the logic is invalid, the negative torque limit value is determined by function code P¹5.06;

When the external DI signal (FunIN. 15) is logically valid, the negative torque limit value is determined by the torque value corresponding to the input voltage of AI terminal.

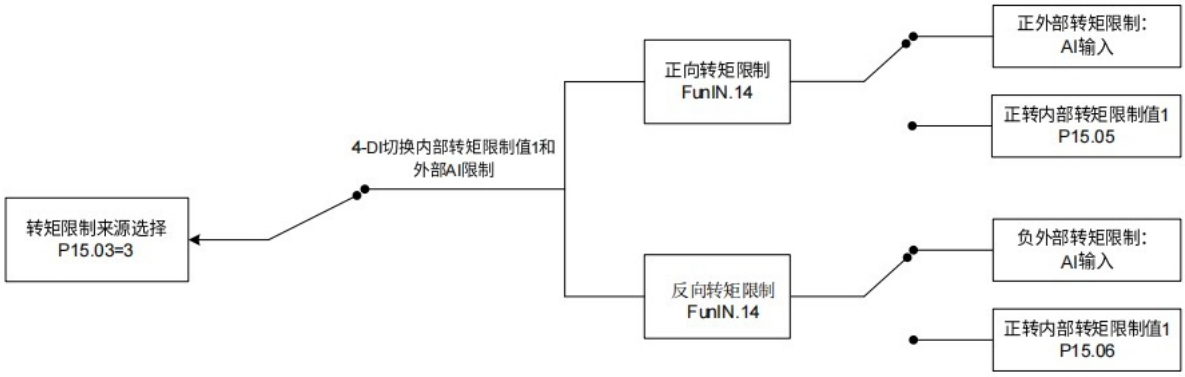

Figure 4-51 P15.03=3 Torque Limit Source

Table 4-34 P15.03=3Description

DI function	state	FunIN. 14 positive OFF	Torque limit selection ON
FunIN.15 Reverse torque limit selection	OFF	The positive torque limit is set by P15.05 and the negative torque limit is set by P 15.06	The positive torque limit value is set by the AI input corresponding to the torque value and the negative torque limit value is set by P15.06
	ON	The positive torque limit is set by P15.05 and the negative torque limit is set by AI inputting the corresponding torque value	The positive torque limit is set by the AI input corresponding to the torque value and the negative torque limit is set by the AI input corresponding to the torque value

FC		name	Scope of the setting	unit	function	Meth-odology	entry-into-force time	Factory Settings
P15	04	Torque limits AI choices	1-AI1 restriction 2-AI2 restriction		Select the analog input channel for the torque limit signal	Shut down Settings	with immediate effect	1
P15	05	Internal rotation torque limit 1	0~300. 0	%	Set the internal positive and negative torque limits	move	immediat-ely	300. 0

FC		name	Scope of the setting	unit	function	Meth-odology	entry-into-force time	Factory Settings
					(100% corresponds to 1 times rated torque)	setting	come into force	
P15	06	Reverse internal torque limit 1	0~300.0	%		Operat-ing Sett-ings	with immediate effect	300.0
P15	07	Internal torque limit for rotation 2	0~300.0	%	Set the internal positive and negative torque limit value (100% corresponds to 1 times the rated torque)	Operat-ing Sett-ings	with immediate effect	300.0
P15	08	Reverse internal torque limit 2	0~300.0	%		Operat-ing Sett-ings	with immediate effect	300.0

5) P15.03=4: Internal torque limit 1 and external AI minimum

Torque limit: After selecting the external analog channel according to P15.04,

When the external DI signal (FunIN.14) is logically invalid, the forward torque limit value is determined by the torque value corresponding to the input voltage of the external AI terminal;

When the external DI signal (FunIN. 14) is logically valid, the forward torque limit value is determined by the smaller value between the function code P15.07 and the torque value input by the AI terminal.

Negative torque limit: After selecting the external analog channel according to P15.04,

When the external DI signal (FunIN. 15) is logically invalid, the negative torque limit value is determined by the torque value corresponding to the input voltage of the external AI terminal;

When the external DI signal (FunIN. 15) is logically valid, the negative torque limit value is determined by the smaller value between the function code P15.08 and the torque value input by the AI terminal.

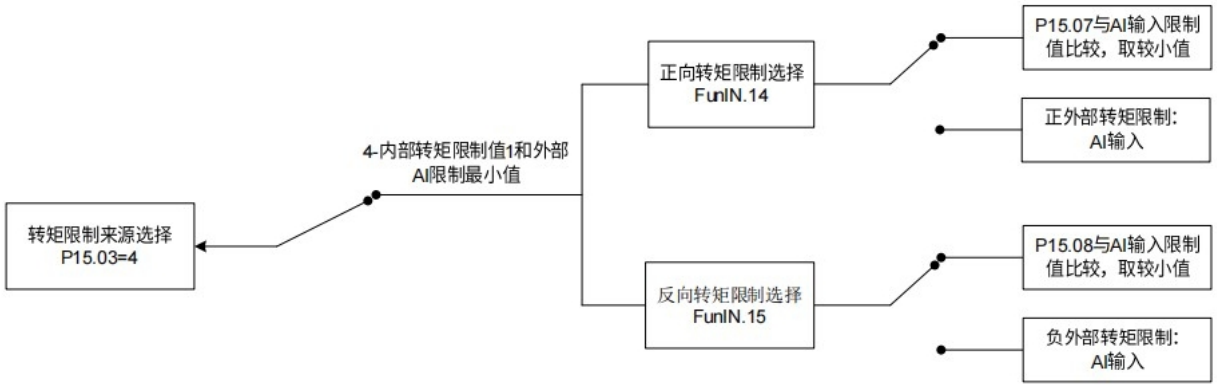

Figure 4-52 P15.03=4 Torque Limit Source

Table 4-35 P15.03=4 Description

DI functional status		FunIN. 14 Positive torque limit selection	
		OFF	ON
FunIN.15 Reverse torque limit selection	OFF	The positive torque limit is set by the AI input corresponding to the torque value and the negative torque limit is set by the AI input corresponding to the torque value	The torque limit value is set by comparing the corresponding torque value input by AI with P15.07 and taking the minimum value The negative torque limit is set by the corresponding torque value input by AI
	ON	The positive torque limit value is set by the AI input corresponding to the torque value, and the negative torque limit value is set by comparing the AI input corresponding to the torque value with P15.08 and taking the minimum value	The torque limit value is set by comparing the corresponding torque value input by AI with P15.07 and taking the minimum value The negative torque limit value is set by comparing the corresponding torque value input by AI with P15.08 and taking the minimum value

2. Set the Torque Limit DO Output Signal

When the torque command reaches the torque limit value, the driver outputs a torque limit signal (FunOUT. 12: torque limit) for the host computer to use. At this time, one DO terminal of the driver should be assigned as FunOUT. 12, and the logic of the DO terminal should be determined.

Function number	Function name	description	remarks
FunOUT. 12	torque limitation	**Effective-The driver torque command reaches the torque limit value and is limited to the limit value invalid-The driver torque command does not reach the limit value**	

4.2.3.Speed limit in 4th torque mode

In the torque control mode, if the given torque command is too large, greater than the load torque of the mechanical side, it will lead to the continuous acceleration of the motor, which may cause overspeed and damage to the mechanical equipment. Therefore, in order to protect the machinery, it is necessary to limit the speed of the motor.

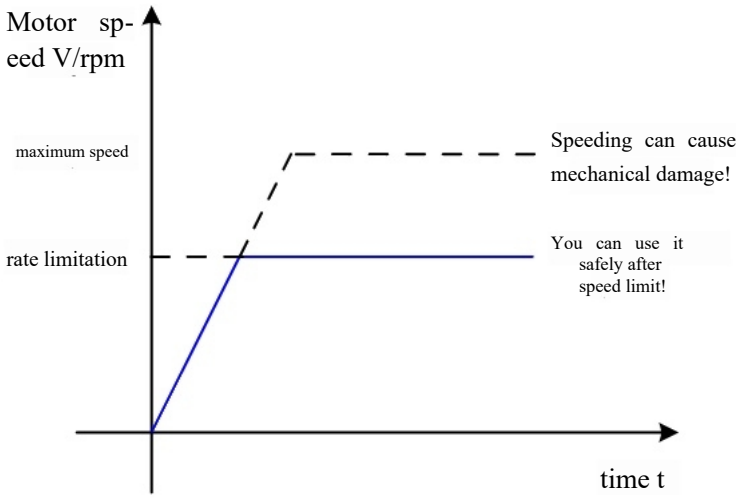

Figure 4-53 Torque Mode Speed Limit Diagram

1. Where to Set Speed Limits

In torque mode, the selection of speed limit sources can be configured through function codes. Once set, the actual motor speed will be restricted to the specified limit value. Upon reaching this threshold, the motor will maintain a constant speed at the limit value. The speed limit should be determined based on operational requirements under load conditions.

FC		name	Scope of the setting	unit	function	Method of setting	entry-into-force time	Manufacturer
P15	09	Source selection of speed limit in torque mode	p-Internal speed limit 1-DI Select speed limit 2-External AI speed limit	-	Select the source of speed limit in torque mode	with immediate effect	Operating Settings	0

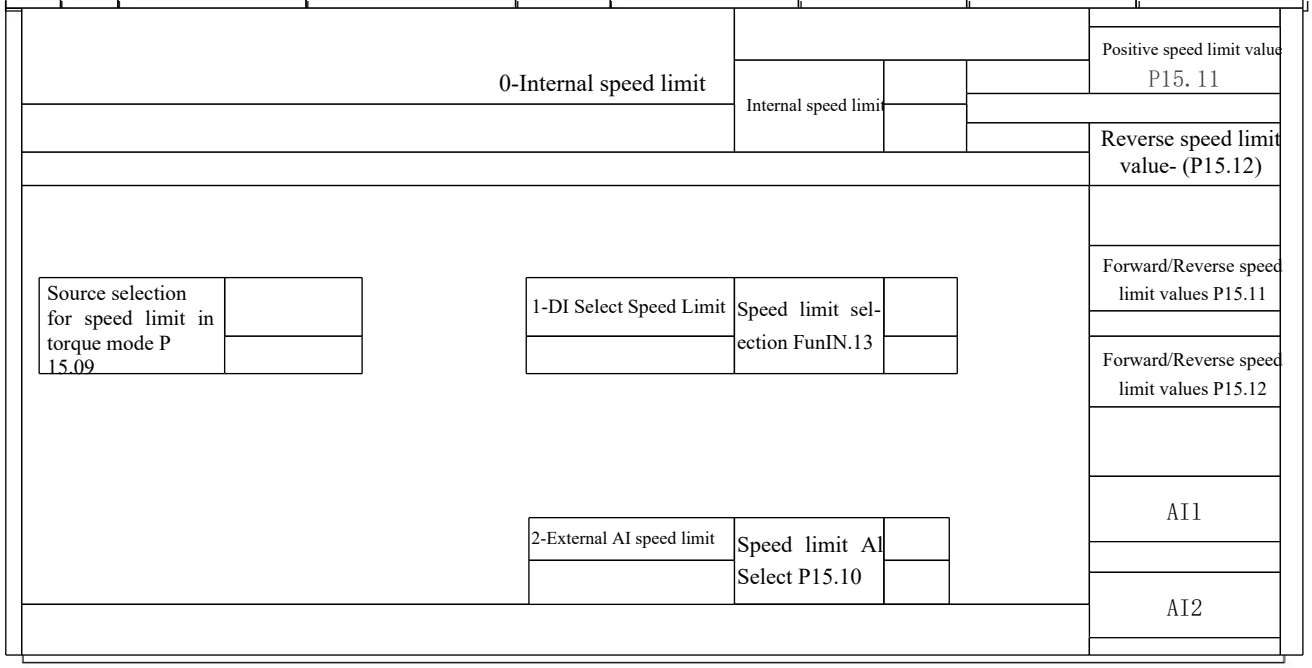

Figure 4-54 Sources of Speed Limits

1) P15.09 = 0: Internal Speed Limit

When the motor moves in different directions, the speed is only determined by the internal function codes P15.11 and P15.12.

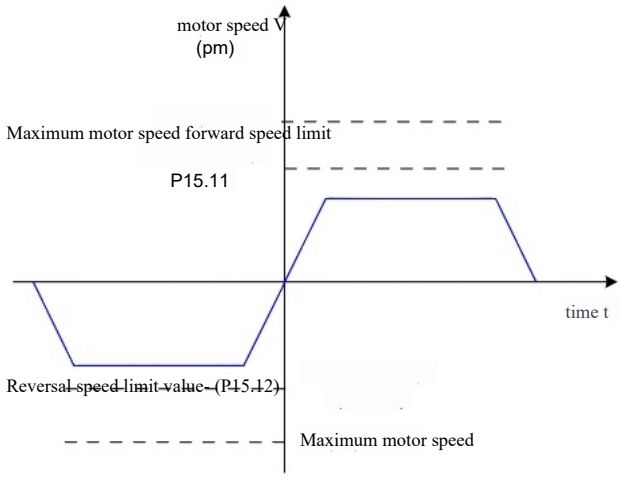

Figure 4-55 P15.09=0 Speed Limit Curve Diagram

2) P15.09=1: DI Select speed limit

The servo driver selects P15.11 or P15.12 as the forward/reverse speed limit value according to the actual DI terminal logic.

At this time, a DI logic should be assigned to the servo driver for the DI function FunIN. 13 (speed limit selection) and a DI terminal logic should be assigned.

Function number	Function name	description	remarks
FunIN. 13	Speed limit selection	**Invalid P¹5.11 as the internal positive/reverse speed limit value valid P¹5.12 as the internal positive/reverse speed limit value**	

Table 4-36 Speed Limit Description

F u n I N. 1 3 speed Limits of Choice	
OFF	ON
motor speed V (rpm) Maximum motor speed forward speed limit P15.12 time t Reverse rotation speed limit -(P15. 12) Maximum motor speed Fun IN. 13 invalid The speed limit is set by P 1 5.1 2	motor speed V (rpm) Maximum motor speed forward speed limit P15.11 time t Reverse rotation speed limit -(P15. 11) Maximum motor speed FunIN.13 valid The speed limit is set by P 1 5.1 1

FC		name	Scope of setting	unit	function	Meth-odology	entry-into-force time	Factory Settings
P15	10	Speed limit AI selection	1-AI1 2-AI2	-	Select the analog channel where AI is used as the source of speed limit	with immediate effect	Operating Settings	1
P15	11	Internal speed positive limit value during torque control	0~6000	rpm	Forward speed limit in set torque mode/ Speed limit in set torque mode 1	with immediate effect	Operating Settings	3000
P15	12	Internal speed negative limit value during torque control	0~6000	rpm	Reverse speed limit value in set torque mode/ Speed limit value 2 in set torque mode	with immediate effect	Operating Settings	3000

3) P15.09=2 External AI speed limit

When the motor moves in opposite directions, input the corresponding voltage for speed limit through the external analog channel specified by P15.10. The AI input is effective when it is below the internal speed limit (P 15.11/P15.12), and the internal speed limit takes effect when the AI input exceeds this threshold (P15.11/P15.12).

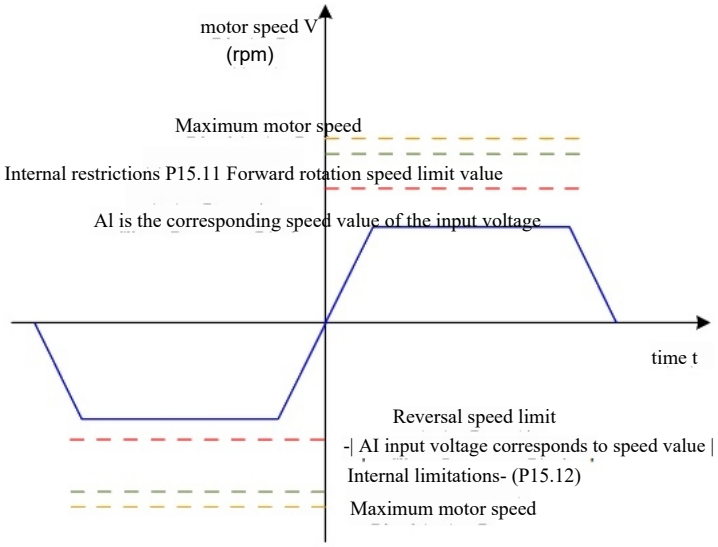

Figure 4-56 P15.09=2 Speed Limit Curve Diagram

2. Set the Speed Limit DO Output Signal

In torque mode, when the absolute value of the servo motor's actual rotational speed exceeds the speed limit and the time reaches P 15.24, it is determined that the motor's actual rotation speed has been restricted. At this point, the servo driver can output a speed limit signal (FunOUT.13: Speed Limit Signal) for use by the host computer. Conversely, if either condition is not met, the speed limit signal becomes invalid.

Speed limit (FunOUT. 13: Speed Limit) signals are only judged in torque mode and servo operation.

One DO terminal of the servo driver should be assigned to DO function FunOUT.13, and DO terminal logic should be set.

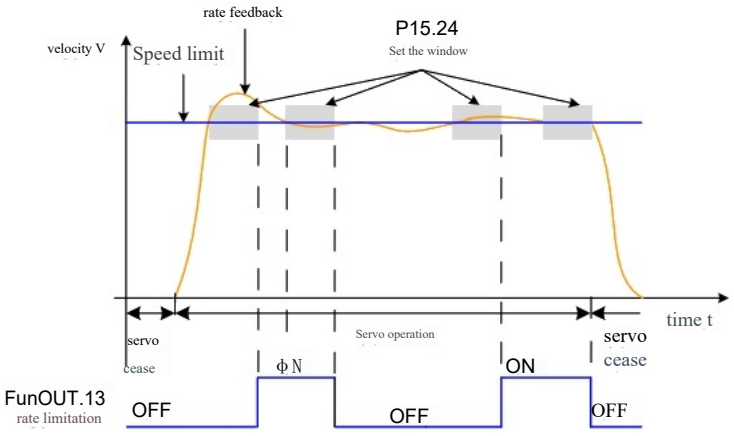

FIG. 4-57 Is an Example of the Speed Limit DO and Output Waveform

Function number	Function name	description	remarks
FunOUT. 13	Speed limit selection	Effective-Motor speed is limited; ineffective-Motor speed is not limited	

4.2.3.5 Torque Reaches Output

The torque reached function is used to determine whether the actual torque command has reached the set range. When the actual torque command reaches the torque command threshold, the drive

The device can output the corresponding DO signal (FunOUT.9: torque arrival) for the use of the upper computer.

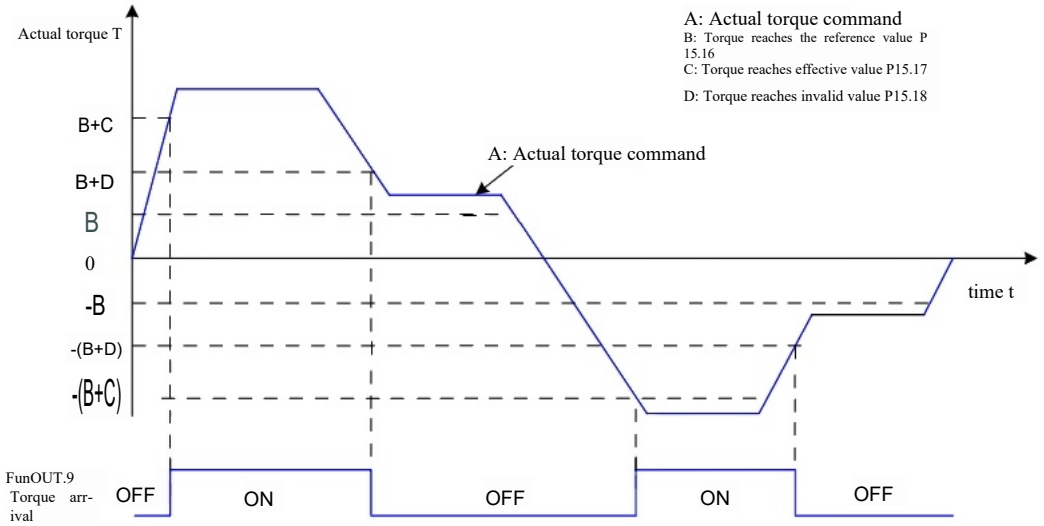

Figure 4-58 Example of Output Waveform of Torque Transfer

Actual torque command (available through P09.02): A;

The torque reaches the reference value P15.16: B;

The torque reaches the effective value of the hysteresis P15.17: C;

The torque reaches the invalid hysteresis value P15.18: D;

C and D are biases based on B.

Therefore, when the DO signal from the torque reaches invalid to valid, the actual torque command must meet:

$|A \geq B+C$

Otherwise, the torque reaches the DO signal and remains invalid.

Conversely, when the DO signal from the torque reaches valid to invalid, the actual torque command must meet:

$|A < B+D$

Otherwise, the torque reaches the DO signal and remains valid.

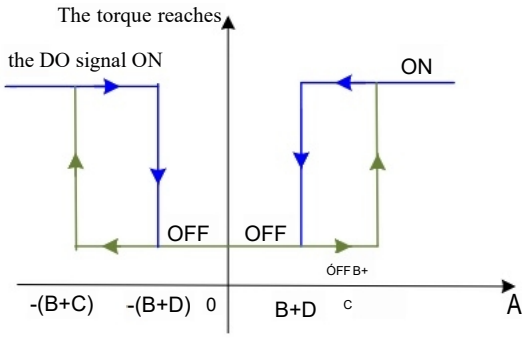

Figure 4-59 Torque Reaches the Output Effective Explanation

FC		name	Scope of the setting	unit	function	Meth-odology	entry-into-force time	Factory Settings
P15	16	The torque reaches the reference value	0~300.0	%	Set the torque to reach the instruction reference value (100% corresponds to double rated torque)	Operat-ing Sett-ings	with immediate effect	0
P15	17	The torque reaches its effective value	0~300.0	%	Set the torque to reach the effective offset threshold (100% corresponds to double the rated torque)	Operat-ing Sett-ings	with immediate effect	20.0
P15	18	The torque reaches an invalid value	0~300.0	%	Set the torque to reach the invalid offset threshold (100% corresponds to twice the rated torque)	Operat-ing Sett-ings	with immediate effect	10.0

When the use torque reaches the DO signal, one DO terminal of the servo driver should be assigned to DO function 9 (FunOUT. 9: torque arrival) and the DO terminal logic should be determined.

Function number	Function name	description	remarks
FunOUT.9	Speed limit selection	Valid-The absolute value of the torque command reaches the set value invalid-The absolute value of the torque command is less than the set value	

4.3 Application Function

4.3.1 Soft Limitations

Traditional hardware limit function: In the traditional way, the limit position can only be given by external signals. The external sensor signal is connected to the servo driver

CN5 interface.

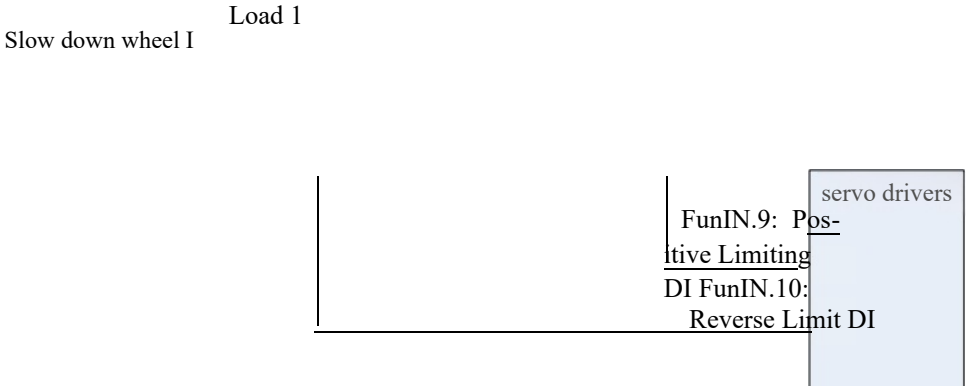

Figure 4-60 Schematic Diagram of Installation of Limit Switch

Soft Limit Function: This feature compares the position feedback from the driver with preset limit values. When exceeding these limits, it triggers an alarm and immediately executes a shutdown operation. Available in both absolute and incremental positioning modes. For incremental mode, set P05.43 to 2. After powering on, the driver first performs origin reset to locate the machine's starting point before activating the soft limit function.

(1) Comparison of advantages and disadvantages between traditional hardware limit and soft limit functions

Traditional hardware limit function		Soft limit function	
1	It can only be limited to linear motion and single rotation	1	It is not only suitable for linear motion, but also for rotation mode
2	External mechanical limit switches are required for installation	2	No hardware wiring is required to prevent misoperation caused by poor line contact
3	It is impossible to judge mechanical slip anomaly	3	Internal position comparison to prevent mechanical slippage leading to abnormal action
4	When the power is cut off, the mechanical removal limit cannot be judged and cannot be alarm		

(2) Soft limit related function codes

FC	name	Scope of the setting	unit	function	Methodology	entry-into-force time	Factory Settings
P05. 43	Soft limit setting	0-no restrictions 1-restrictions 2. Post-0 restrictions	1	Soft limit function selection.	Shut down Settings	with immediate effect	0

P13. 63	Positive position software limits	−2147483648~ 2147483647	Directive unit	Set the positive position limit of the software limit.	Shut down Settings	with immediate effect	2147483647
P13. 65	Reverse position software limits	−2147483648~ 2147483647	Directive unit	Set the reverse position limit of the software limit.	Shut down Settings	with immediate effect	−2147483648

- P05.43=0 When, do not enable the soft limit function;
- P05.43=1 When the driver is powered on, it immediately activates the soft limit function. When the position feedback counter (P09.34) exceeds P13.63, triggering an A.220 warning, a forward overtravel shutdown is executed; when the position feedback counter (P09.34) falls below P13.65, an A.221 warning occurs, resulting in a backward overtravel shutdown.
- P05.43=2 When the driver is powered on, the soft limit is not enabled before returning to the origin. After returning to the origin, if the position feedback counter (P09.34) exceeds P13.63, an A.220 warning will trigger and a positive overtravel shutdown will be executed. If the position feedback counter (P09.34) falls below P13.65 after returning to the origin, an A.221 warning will activate and a negative overtravel shutdown will be executed.
- When P13.63 <P13.65, the values are swapped

4.3.2 Frequency Division Output

pay attention to：

For applications where the signal frequency division output accuracy is required to be high, it is recommended to use the effective change edge of Z signal output:

① P05.22=0 The effective change is along the descending edge;

② P05.22=1 The effective change is along the rising edge.

The frequency division output function of the servo driver refers to the output of position command pulses or encoder feedback position pulses in the form of A/B orthogonal pulses.

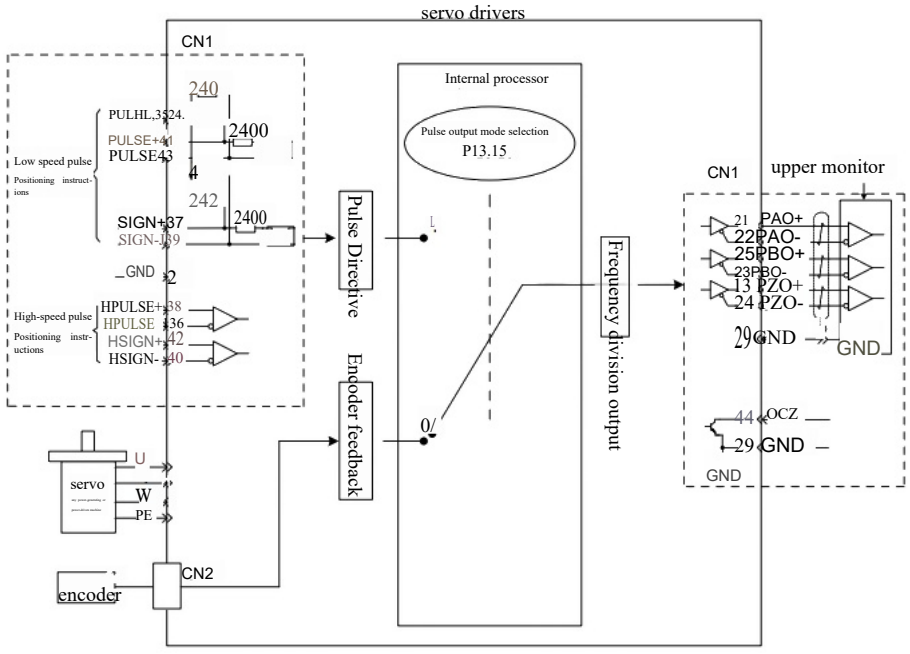

Figure 4-61 Schematic Diagram of Frequency Division Output Principle

Among them, when multi-axis servo pulse synchronous tracking is recommended to use the synchronous output of pulse command, that is, P13.15= 1; when the upper computer is used as closed-loop feedback, it is recommended to use the frequency division output of encoder, that is, P13.15=0;

The servo driver has one set of frequency division output terminals:

A-phase pulse: PAO+ and PAO-, differential output, maximum output pulse frequency is 4Mpps

B-phase pulse: PBO+ and PBO-, differential output, maximum output pulse frequency is 4Mpps

Z-phase pulse: PZO+ and PZO-, differential output, maximum output pulse frequency is 4 Mpps.

When using the frequency division output function, the pulse output mode (P13.15), frequency division output phase (P05.23), encoder frequency division pulse number (P13.16) and Z signal output polarity (P05.22) should be set according to the need.

When the output source is the encoder frequency division output (P13.15=0), the number of A/B phase output pulses is determined by P13.16; the pulse width T of A/B phases is determined by the motor speed, and Z phase is synchronized with A phase, with the same width as T; the Z signal is output once for every full rotation of the motor.

Figure 4-37 Encoder Frequency Division Output (P13.15=0) Pulse Diag-
ram

P05. 23 (Frequency division output phase)	P05. 22 (Z Pulse Output Polarity)	Positive rotation, pulse output diagram	Reversal, pulse output diagram
0	0	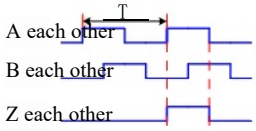 Phase A is 90° ahead of phase B	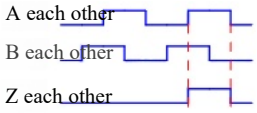 B phase is 90° ahead of A phase
	1	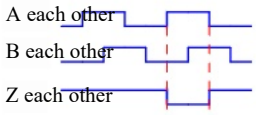 Phase A is 90° ahead of phase B	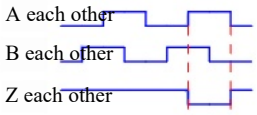 B phase is 90° ahead of A phase
1	0	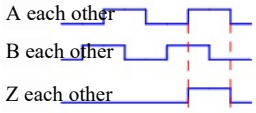 B phase is 90° ahead of A phase	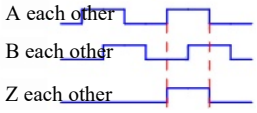 Phase A is 90° ahead of phase B
	1	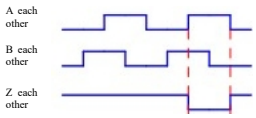 B phase is 90° ahead of A phase	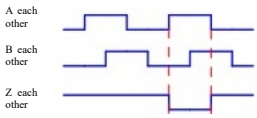 Phase A is 90° ahead of phase B

FC		name	Scope of the setting	unit	function	setting way	come into force time	leave the factory setting
P05	23	Frequency division output phase	0A ahead of B 1-A滞后B	-	Set the phase relationship between A-phase pulse and B-phase pulse of the pulse output.	halt setting	once more set up an electric circuit	0
P13	15	Servo pulse Output mode selection	0-Encoder frequency division output 1-Pulse command synchronization output 2-Frequency division or synchronization output disable	-	Select the servo pulse output mode	Shut down Settings	Re-energizing	0
P13	16	Number of pulse division in encoder	35~1073741824	p/r	Set the resolution of the output pulse to equal the number of PAO/PBO (before 4 times frequency) output pulses per revolution of the motor.	Shut down Settings	Re-energizing	2500
P05	22	Z Signal Output Polarity	0-Output high level when valid 1-Output low level when valid		Set the output level when the Z-phase pulse is valid	Shut down Settings	Re-energizing	1

Chapter 5 Gain Adjustment

5.1 Purpose

In order to make the servo system track the instructions from the host computer or internal setting quickly and accurately, give full play to the mechanical performance, improve the production beat and efficiency, it is necessary to adjust the gain of the servo control loop reasonably.

Taking the common screw load as an example, as shown in Figure 5-1, the trajectory tracking effect can be greatly improved by reasonably improving the correlation gain of the speed ring and position ring, ensuring the gain matching, and combining with the speed feedforward function.

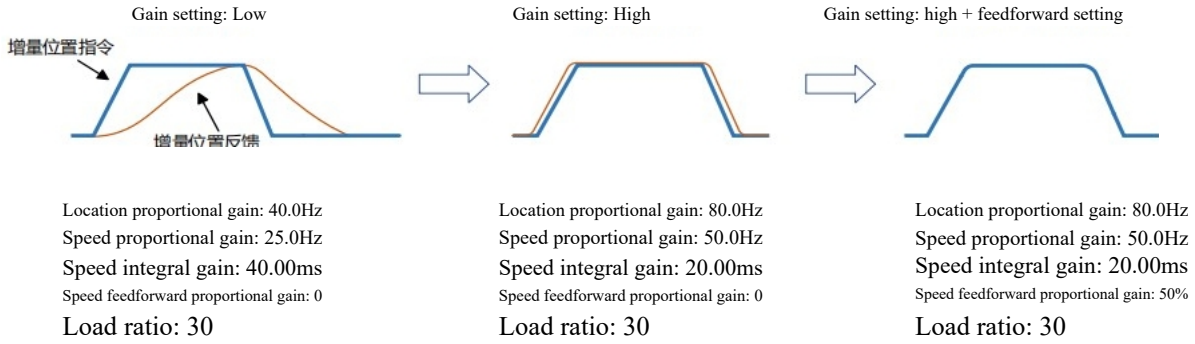

Figure 5-1. Example of Gain Setting

The fundamental gain parameters of a servo loop include position loop proportional coefficient Kp, speed loop gain coefficient K, speed loop integral coefficient Ki, torque low-pass filter coefficient Tm, and load moment of inertia ratio/r. These parameters interact with each other, and it is generally necessary to ensure the inner loop bandwidth exceeds the outer loop bandwidth to maintain system stability. By properly configuring these parameters, servo systems can achieve optimal control performance in both tracking capability and disturbance rejection. To reach the maximum performance of servo systems, gain settings must balance various parameter values, which requires highly skilled field technicians. The HR3 series high-performance servo supports both manual parameter tuning and automatic parameter adjustment modes. For typical applications like 3C (computer, communication, electronics), lithium battery, and TP (tungsten) industries, automatic adjustment functions suffice. In precision trajectory applications such as semiconductor manufacturing, machine tools, and laser processing, detailed parameter configuration is required for optimal results. For high-speed, high-precision P2P (point-to-point) applications including high-speed dispensing machines, die bonder, and spectrometer, the HR3 series servo features gain switching functionality. Through strategic gain settings, it achieves exceptional tracking performance.

Before the gain adjustment, the trial operation in Chapter 3 must be carried out first to confirm that the motor can run normally without interference!

5.2 Calibration Method

The general process of gain adjustment is shown in the following figure:

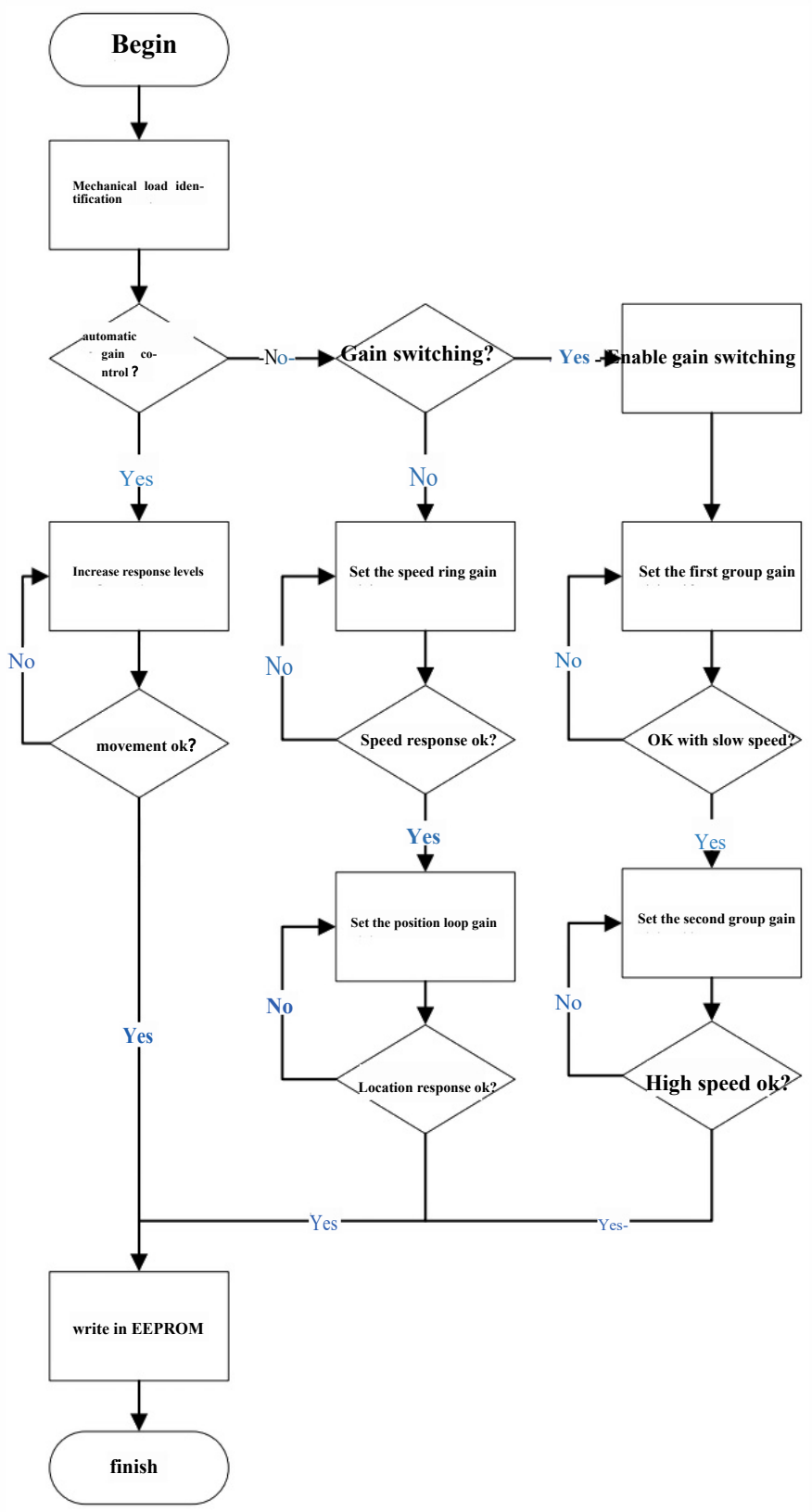

Figure 5-2 Gain Adjustment Process

The HR3 series servo provides three gain adjustment modes, namely "automatic gain adjustment", "manual gain adjustment" and "gain automatic switching". Among them,

> "In the" Automatic Gain Adjustment "mode, only one parameter in the P1A group-" Response Level Setting "needs to be set to realize the linkage setting of multiple internal gain parameters to achieve the desired response action. The higher the response level, the faster the response. Detailed introduction can be found in Section 5.2.4" Automatic Gain Adjustment".

"Manual gain adjustment" requires the user to turn off the automatic gain adjustment mode P1A group- "Real-time self-adjustment setting" is set to "0-Off", and then set the gain parameters of P06 group respectively, including speed ring and position ring gain parameters. The inner ring and outer ring are adjusted respectively to achieve the desired response performance;

> "To enable automatic gain switching, disable the automatic gain adjustment mode in P1A group by setting" Real-time Self-adjustment Settings "to" 0-Off ". Activate the gain switching function parameters: In P06 group, set" Gain Switching-Mode Selection "to 1 and" Gain Switching-Condition Selection "to" 10-Position Command + Actual Speed".

To achieve optimal tracking performance with these three gain adjustment methods, the prerequisite is to implement a rigorous " mechanical load identification" procedure. The HR3 series servo incorporates a built-in mechanical load recognition algorithm that automatically identifies mechanical load conditions through forward and reverse operation cycles. This section will sequentially explain mechanical load identification, manual gain adjustment, automatic gain adjustment, and gain switching mechanisms.

5.2.1 Machine Load Identification

In servo systems, mechanical loads serve as the controlled objects and critical components. Mechanical load identification involves analyzing key parameters such as load inertia, friction forces, and mechanical resonance points. By automatically recognizing critical mechanical characteristics, the servo system optimally adjusts control loop parameters and compensation settings. This intelligent configuration achieves application-specific dynamic response performance while significantly reducing the workload for field technicians during parameter adjustments.

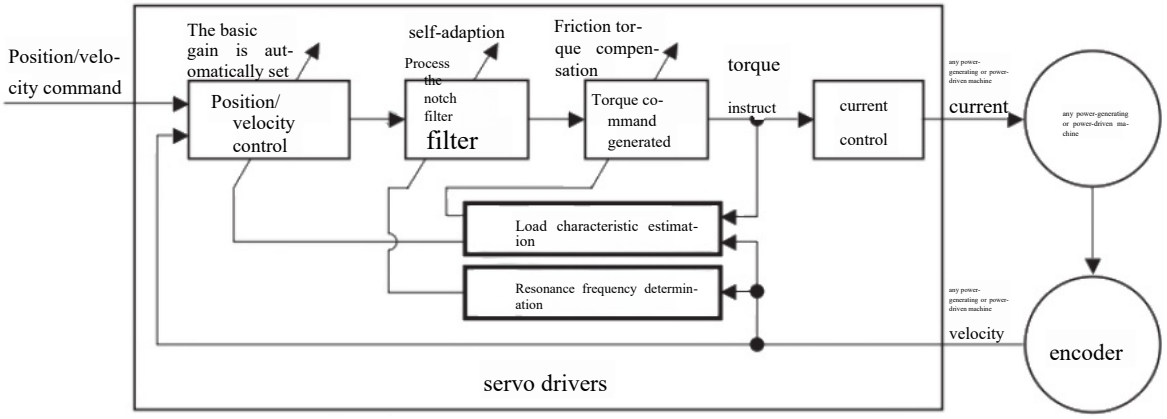

Figure 5-3 Mechanical Load Identification

Generally, we do not pay much attention to the absolute value of mechanical load inertia, but pay more attention to the relative size of load inertia and motor inertia, so it is usually in the form of "inertia ratio" in the control loop.

"Load inertia ratio" means:

$$\text{负载惯量比} = \frac{\text{机械负载惯量}}{\text{电机转子惯量}}$$

Load inertia ratio is an important parameter of servo system, and correct setting of load inertia ratio can help complete debugging quickly.

The servo driver has built-in load inertia identification function, which can realize automatic load inertia identification by executing this algorithm.

Inertial identification automatic identification method:

By operating the key on the servo drive panel to make the motor move, inertia identification can be realized without the intervention of the host computer;

pay attention to：

Under the following conditions, normal mechanical load identification may not be possible. In such cases, manual gain adjustment should be performed.

Table 5-1 Factors Affecting Mechanical Load Identification

	Factors affecting mechanical load identification
Load inertia	◆Inertial mismatch, load inertance ratio greater than 100 times ◆The load inertia is unstable, time-varying or slowly changing
mechanical properties	◆Mechanical rigidity is extremely low, for example, belt drive mechanism, belt not tensioned ◆Nonlinear factors such as excessive meshing clearance or excessive backlash during forward and reverse operation, for example, gear transmission mechanism, and different installation of gears
Physical condition	◆The speed of motion is less than 150rpm ◆When the acceleration and deceleration torque is less than the offset load torque or less than the viscous friction torque ◆Acceleration is less than 3000rpm/s

If the actual load inertia ratio is very large, resulting in slow motor action, you can increase P1A group- "set the response level" and then re-identify the inertia.

If vibration occurs during identification, the inertia identification should be stopped immediately and the P1A group- "response level setting" should be reduced.

Before offline inertia identification, the following contents are confirmed first:

There is more than one circle of positive and negative movement travel between the mechanical limit switches:

Before offline inertia identification, please make sure that the limit switch is installed on the machine to prevent overtravel during inertia identification, which may cause accidents!

If the actual load inertia ratio is very large, and the estimated value is more than 30 times of the motor inertia, the inertia mismatch phenomenon will occur, resulting in slow motor action. In this case, the following two measures can be taken:

The preset load inertia ratio is a large initial value. It is recommended that the preset value starts at 5.00 times and increases gradually until the identification is updated accordingly;

The load inertia ratio can be set through "P06.10" on the panel, or the parameter "P06 Group-Load Inertia Ratio" can be set through the background software. The driver "P1A Advanced Adjustment-Response Level Setting" can be appropriately increased through the background, or the function code "P1A.01" can be set.

The general process of panel operation inertia identification is as follows:

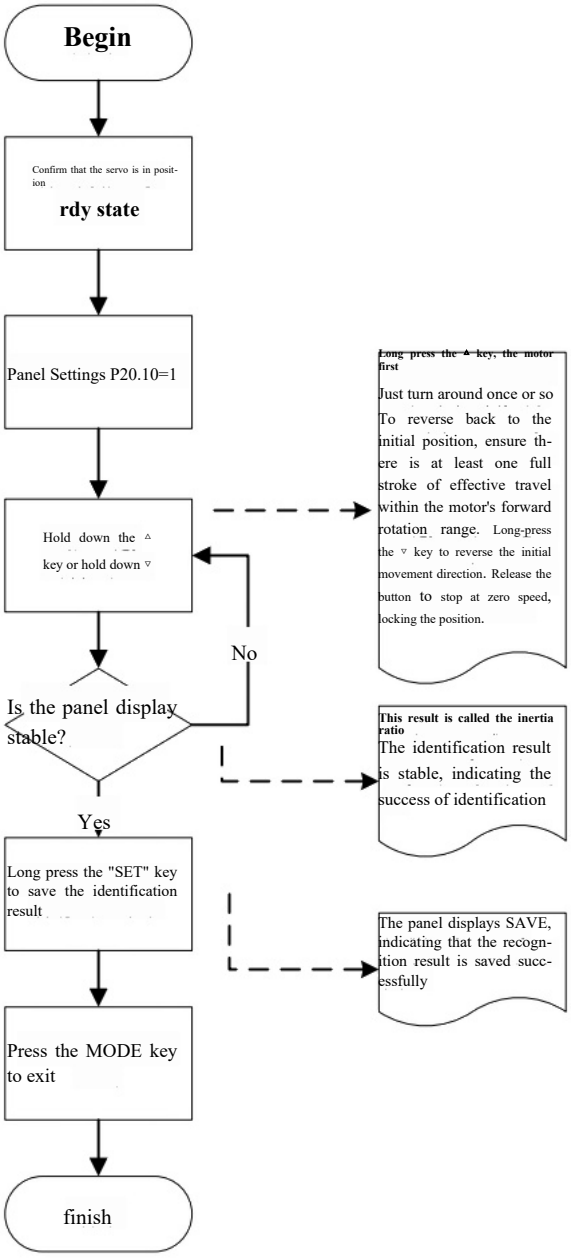

Figure 5-4 Flow Chart of Panel Operation Inertia Identification

The inertial recognition adopts the form of positive and negative triangular wave motion, and the program has preset the optimal motion parameters by default. Users can adjust the motion parameters according to the actual application scenario to achieve the recognition action that meets the field requirements. The motion curve and parameter setting of the recognition program are as follows.

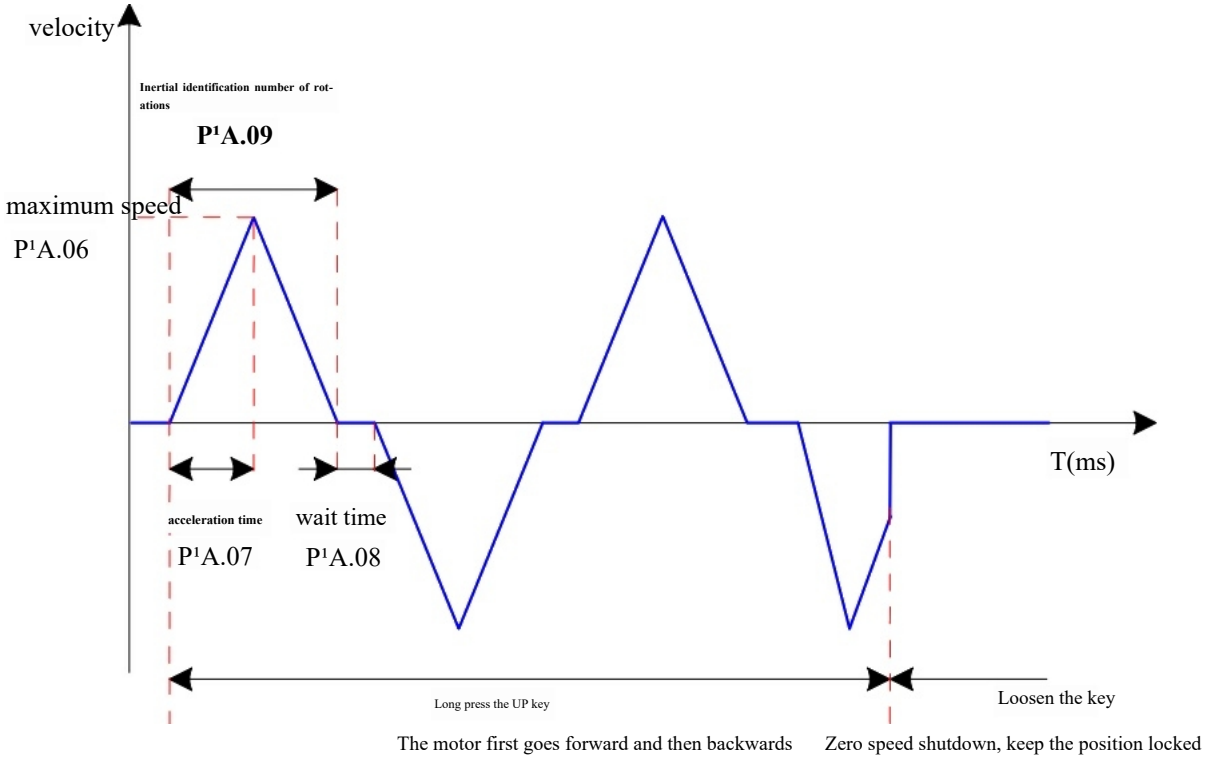

Figure 5-5 Motion Curve of Inertia Identification

Table 5-2 Self-Adjusting Parameter Function Code

FC	P¹A.06	P¹A.07	P¹A.08	P¹A.09
name	Maximum speed of inertial identification	Inertial identification acceleration time	Inertial identification waiting time	Inertial identification number of rotations
accessibility	Read/writable	Read/writable	Read/writable	Read/writable
unit	rpm	ms	ms	shut in a pen
Windows default	500	125	800	1.00
least value	100	20	50	0
crest value	1000	800	10000	655.35
Setting, effective manner	Off setting / Effective immediately	Off/Effective immediately	Off setting / Effective immediately	Off setting/effective immediately
explanatory note	The relevant parameters of offline inertia identification are set internally with default values. In general, no setting is required			

5.2.2 Manual Adjustments

(1) Basic gain parameters

In the case of extreme performance requirements, the gain can be manually fine-tuned to optimize debugging effects through more detailed adjustments.

The servo system is composed of three control loops, from inside to outside successively are the current loop, speed loop and position loop. The basic control block diagram is shown in the figure below.

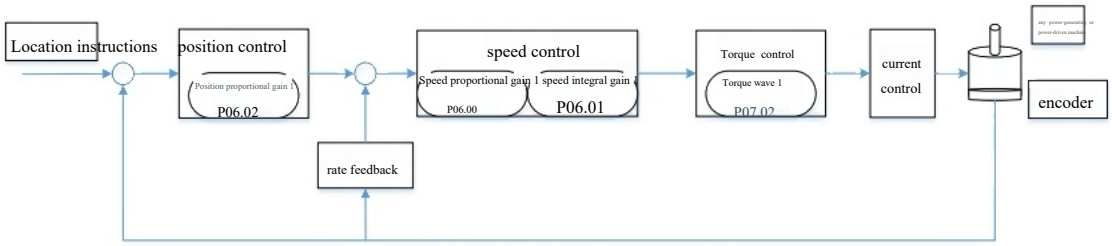

Figure 5-6 Basic Schematic Diagram of Manual Gain

The innermost loop circuits require higher responsiveness. Typically, the bandwidth of inner loops should be set at least four times that of outer loops. For example, if the current loop has a bandwidth of 2000Hz, the speed loop's bandwidth should not exceed 500Hz, and the position loop's bandwidth should not surpass 125Hz. During system debugging, strict adherence to this principle is essential – failure to follow it may lead to instability!

The default current loop gain of servo drivers ensures responsiveness and generally requires no adjustments. The only parameters needing adjustment are the position loop gain, speed loop gain, and other auxiliary gains. Therefore, when making gain adjustments in position control mode to improve positioning response performance, the system stability requires first increasing the speed loop gain while ensuring the inner loop bandwidth is at least four times higher than the outer loop bandwidth. Only after achieving this should the position loop gain be increased to reduce position tracking error. It is crucial to strictly follow this bottom-up sequence when adjusting loop gains.

The basic gain parameter adjustment method is as follows.

Table 5-3 Description of Loop Gain Parameter Adjustment

step	FC	name	Adjustment notes
1	P06. 00	Speed ratio gain 1	Parameter functions: Determines the maximum frequency of speed commands that can be followed by the speed ring. Under the premise of setting the load inertia ratio average (P06.10) correctly, it can be considered that: the maximum following frequency of the speed ring is P06.00 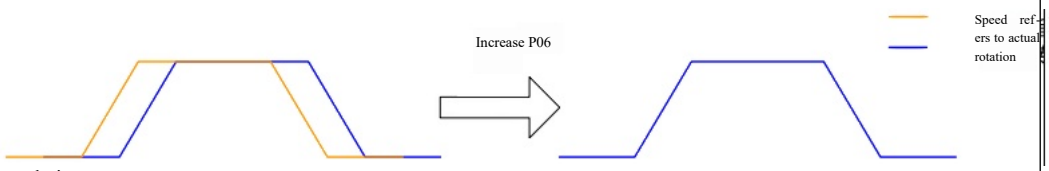 regulation means： In the case of no noise and vibration, increasing this parameter can speed up the positioning time, bring better speed stability and follow-up; If noise is generated, reduce the parameter setting value; When mechanical vibration occurs, you can refer to "Section 5.3.2 Vibration suppression" and use the function of notch filter or torque low-pass filter to suppress vibration.
2	P06. 01	velocity Integral gain 1	Parameter functio-ns:

step	FC	name	Adjustment notes
			Eliminate speed ring deviation. 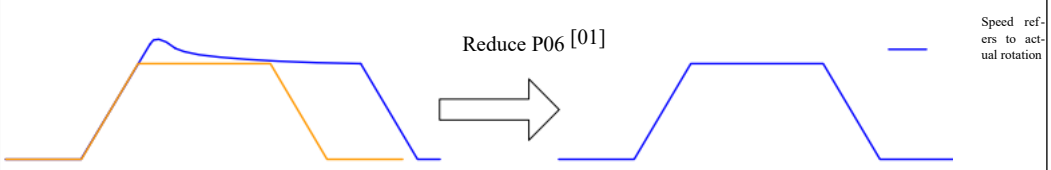 regulation means： It is recommended that the values be taken according to the following relationships: 500≤P06. 00×P06. 01≤1000 For example, when the speed loop gain P06.00=40.0Hz, the speed loop integral time constant should satisfy: 12.50ms≤P06.01≤25.00ms. Reducing the set value can strengthen the integral effect and accelerate the positioning time, but too small set value is easy to cause mechanical vibration. If the setting value is too high, the speed ring deviation will not return to zero. When P06.01 = 512.00ms, the integral is invalid.
3	P06. 02	Position proportional gain 1	Function of parameters: The highest frequency of position commands that the decision position ring can follow. Position loop maximum follow angular frequency =P06.02 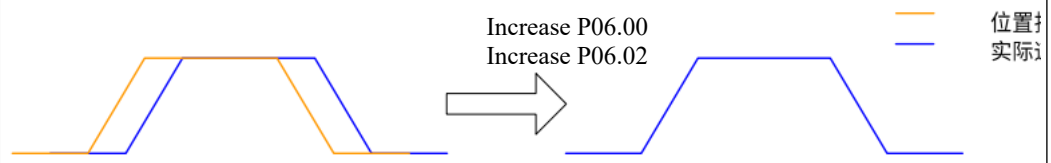 regulation means： In order to ensure system stability, the maximum following frequency of speed ring should be 3~5 times of the maximum following frequency of position ring. Therefore: $3 \le \frac{2 \times \pi \times P06.00}{P06.02} \le 5$ For example, when the speed loop gain P06.00=40.0Hz, the position loop gain should satisfy: 50.2Hz≤P06.02≤83.7Hz. Adjust according to the positioning time. Increasing this parameter can speed up the positioning time and improve the ability of the motor to resist external disturbances when stationary. Setting the value too high may cause the system to be unstable and oscillate.
4	P07. 02	Torque filter 1	Function of parameters: Eliminate high frequency noise and suppress mechanical resonance. 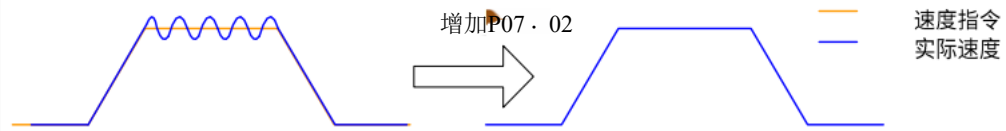 regulation means： It should be ensured that the cutoff frequency of the torque command low-pass filter is more than 4 times the maximum following frequency of the speed ring, so: $\frac{1000}{2 \times \pi \times P07.02} \ge P06.00 \times 4$ For example, when the speed loop gain P06.00=40.0Hz, the torque command filter time constant should satisfy: P07.02≤1.00ms.

step	FC	name	Adjustment notes
			When P06.00 vibration occurs, the vibration can be suppressed by adjusting P07.02. Please refer to "5.3.2 Vibration suppression-low-pass filter" for specific Settings; **If the setting value is too large, the response of the current loop will be reduced;** **To suppress the vibration during shutdown, you can try to increase P06.00 and reduce P07.02;** **If the vibration is too large when the motor stops, try to reduce the P07.02 set value.**

The position loop gain Kp, speed loop gain K, speed loop integral Ti, and torque low-pass filter time T are fundamental gain parameters in servo control systems. Maintaining specific relationships among these four core parameters is essential to ensure the entire servo system achieves a balance between stability and high performance. The mathematical relationships between these four key parameters are as follows:

$$K_p \le \frac{\pi}{2} \cdot K_v$$

$$T_i \ge 4 \cdot \frac{1}{K_v}$$

$$T_f \le \frac{1}{4} \cdot \frac{1}{K_v}$$

Based on the experimental waveform, this paper introduces the role of basic gain parameters in position control mode respectively.

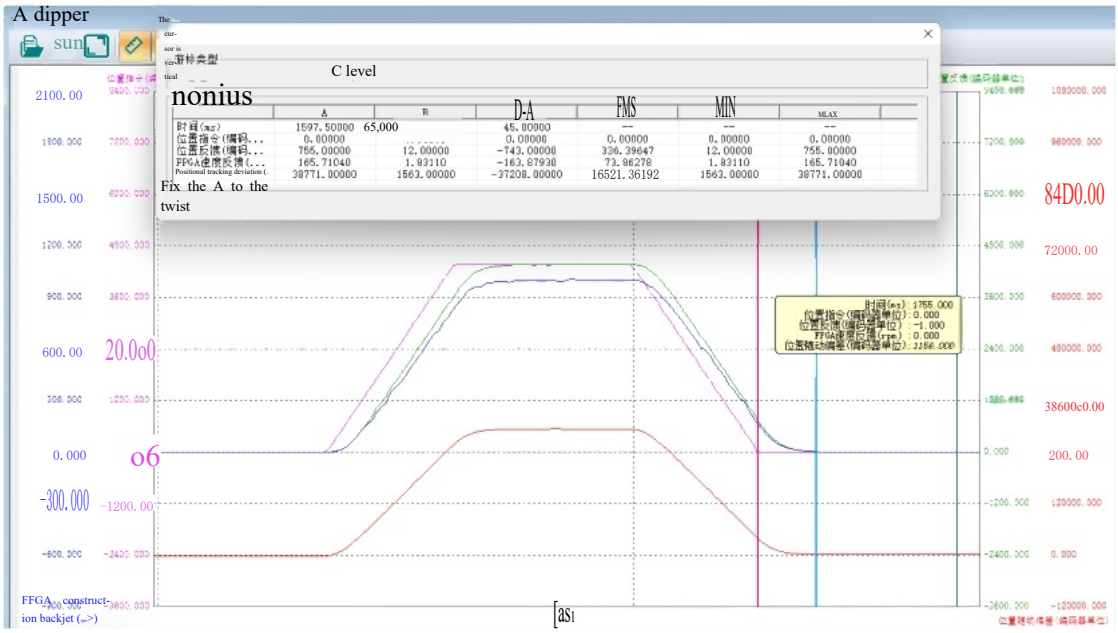

Figure 5-7 Position Tracking Waveform Without Velocity Integral

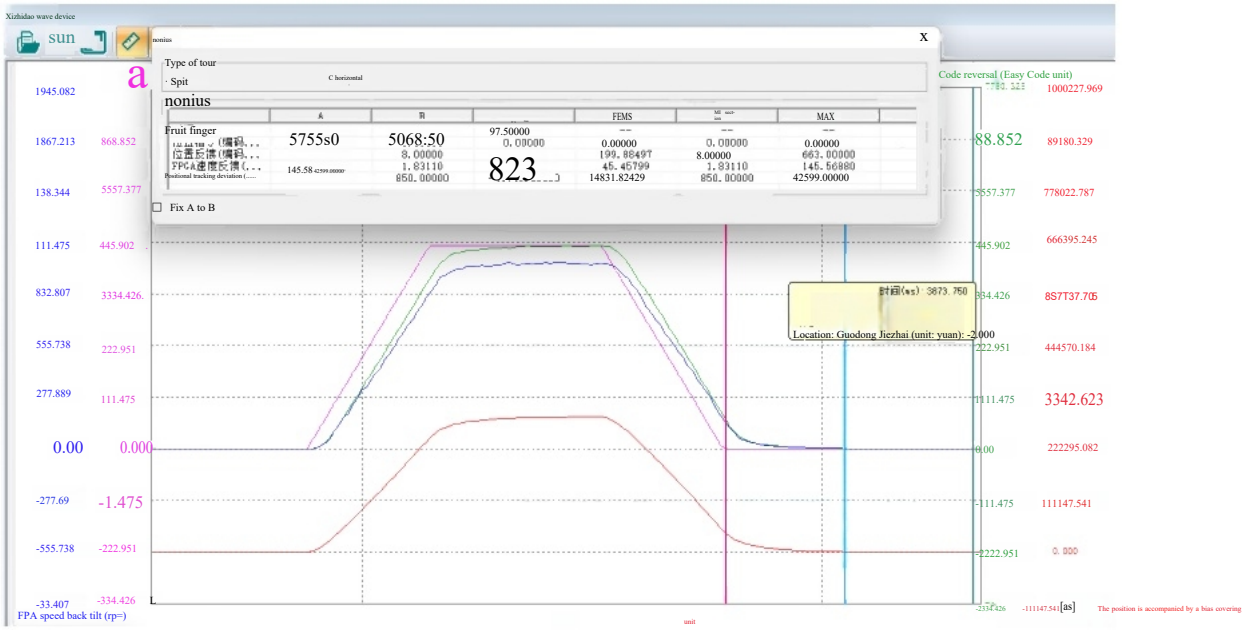

Figure 5-8 Shows the Velocity Integral Position Tracking Waveform

By comparing Figure 5-7 and Figure 5-8, it can be found that when only position gain and speed gain coefficients are used without speed integration, rapid positioning can be achieved with steady-state error, and improving loop gain can reduce the steady-state error; when speed integration is used, there is no steady-state error, but the setting time

elongate 。

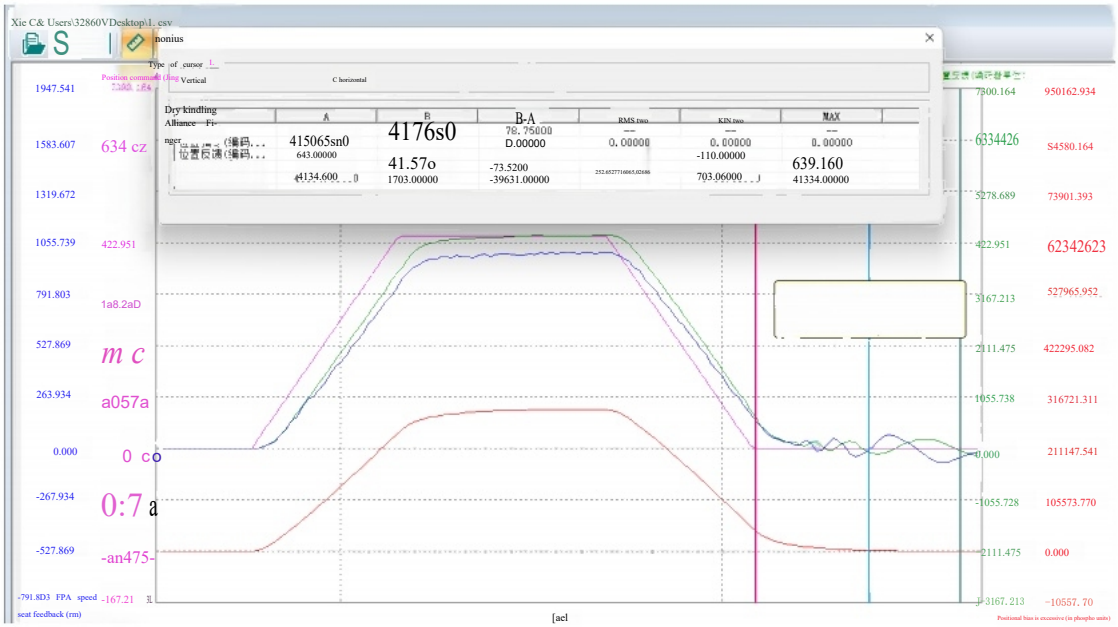

Figure 5-9 Zero Torque Low Pass Filter

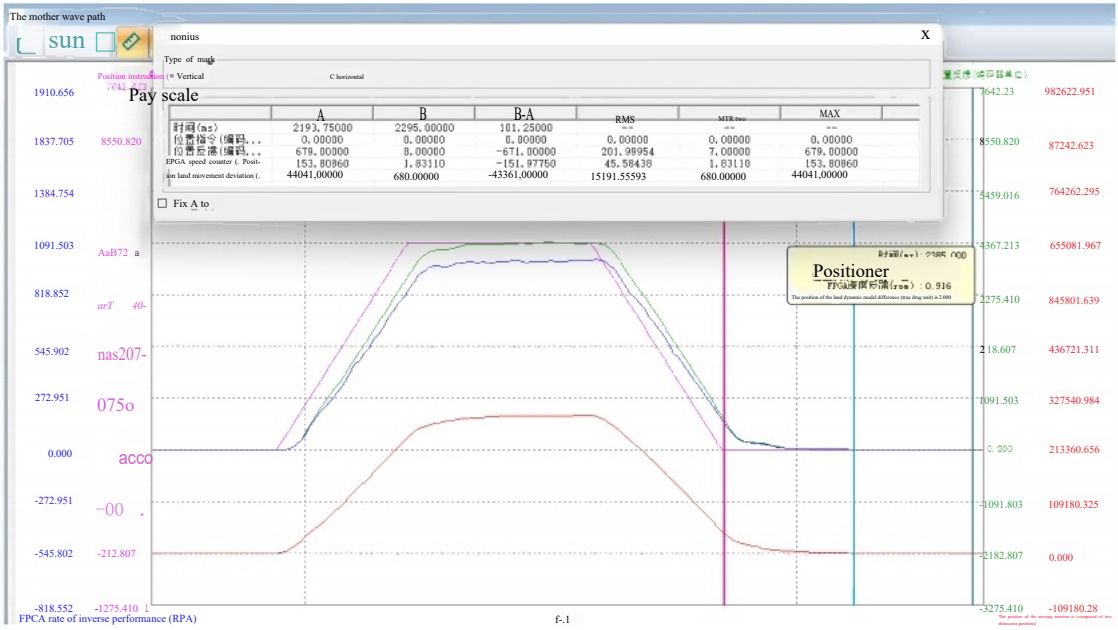

Figure 5-10 Has a Low Pass Filter With Torque Tr=4ms

By comparing Figure 5-9 and Figure 5-10, it can be found that increasing the torque low-pass filter can eliminate the torque oscillation, but the filter corner frequency is low, **the phase lag increases, the gain cannot be improved, and the setting time becomes longer.**

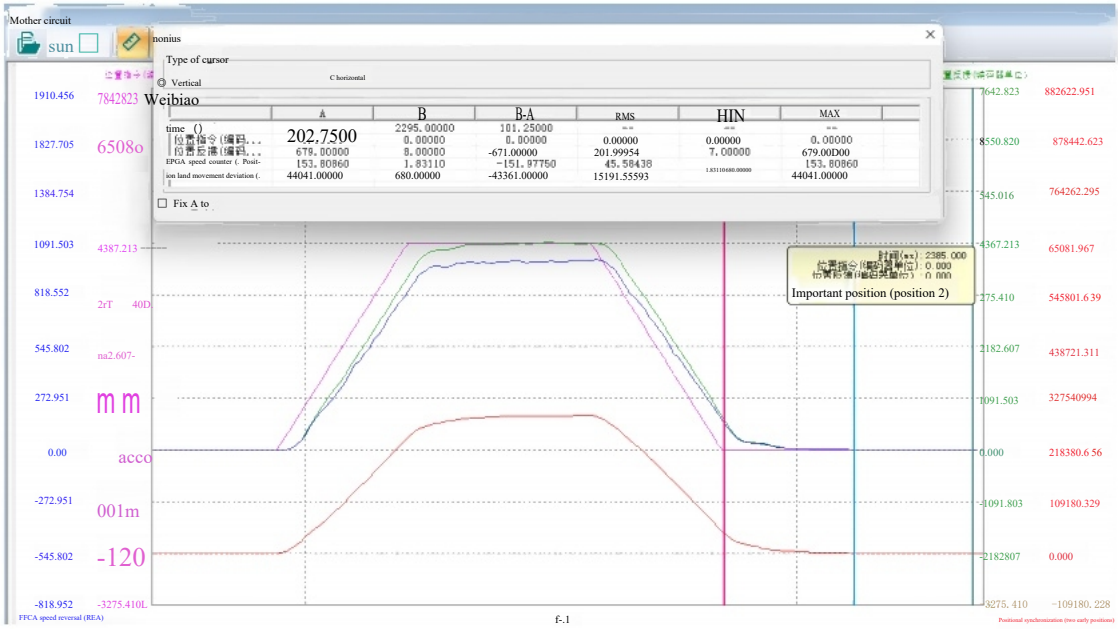

FIG. 5-11 Shows the Low-Pass Filter With Torque T=0.2ms

By comparing Figure 5-10 and Figure 5-11, it can be found that the torque oscillation can be eliminated by setting the low-pass filter reasonably, and the position can be set quickly at the same time**, so a good balance is achieved between fastness and stability** .

The specific functions of gain type and torque control parameters are shown in the following table:

Table 5-4 Gain Type and Torque Control Parameter Function Codes

FC	P06.00-speed proportional gain 1	P06.01-speed integral gain 1	P06.02-Position proportional gain 1	**P07.02-Torque filter 1**
unit	0.1Hz	0.01ms	0.1Hz	0.01ms
Windows default	250	3183	400	79
least value	1	15	1	0
crest value	20000	51200	20000	3000
Setting, effective manner	Off setting / Effective immediately	Off setting / Effective immediately	Off/Effective immediately	Off setting / Effective immediately
explanatory note				

(2) **feedforward control**

Speed Feedforward

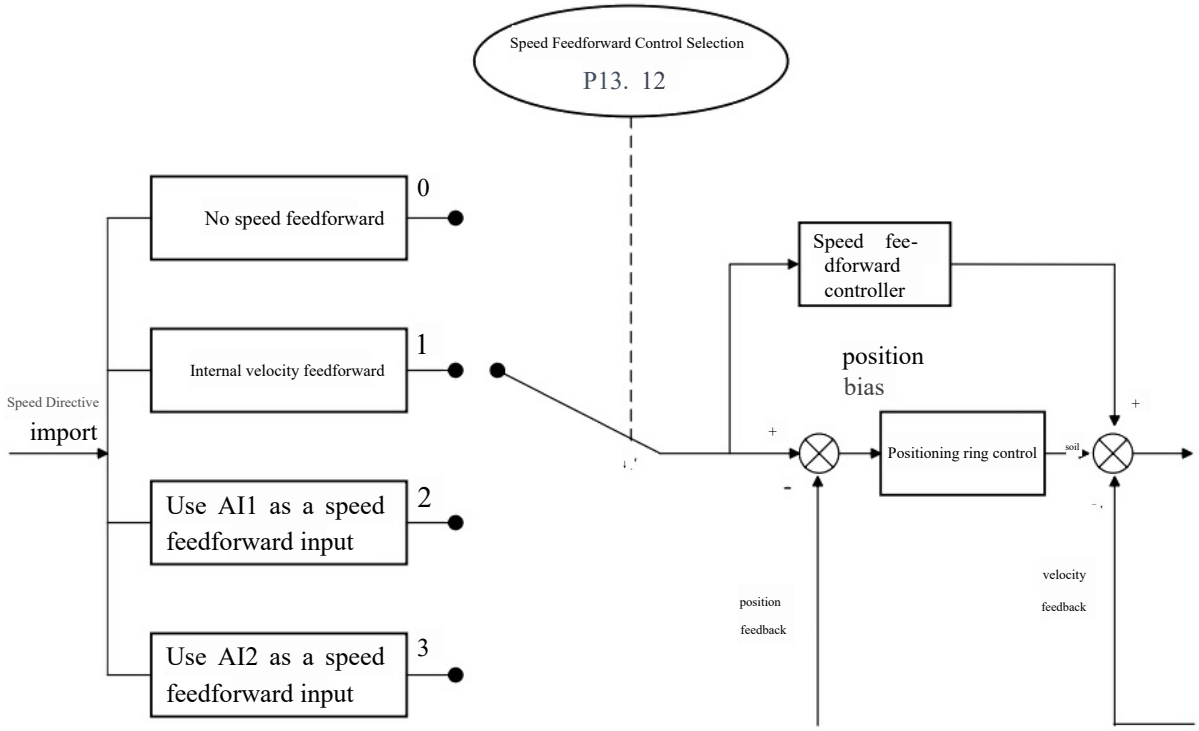

Figure 5-12 Speed Feedforward Control Block Diagram

In position control mode, the system directly calculates theoretical speed commands for motions using internal position commands. These are then combined with speed commands derived from position feedback loops and input into the speed regulator's command input. Compared to pure feedback control, this approach significantly reduces position tracking errors while enhancing response performance. Therefore, implementing the speed feedforward function improves command responsiveness and minimizes positional deviations during constant-speed operation.

Theoretically, the relationship between position tracking deviation and position loop gain and speed feedforward gain is shown as follows. If the speed feedforward gain is set **to 100%, the position deviation will theoretically become zero, but too large a feedforward gain coefficient will cause excessive speed overshoot in acceleration and deceleration sections.**

When the position command update cycle is shorter than the servo control cycle, the differential operation of the speed feedforward will cause a large differential error. This error converts into high-frequency torque command components, which may induce electromagnetic noise during operation. In such cases, it is recommended to use a position command filter (FIR filter or moving average filter) or increase the filter value of the speed feedforward.

Position deviation [instruction unit] = instruction speed [instruction unit/ s]/ position loop gain [1/s] × (100-speed feedforward gain [%]) / 100

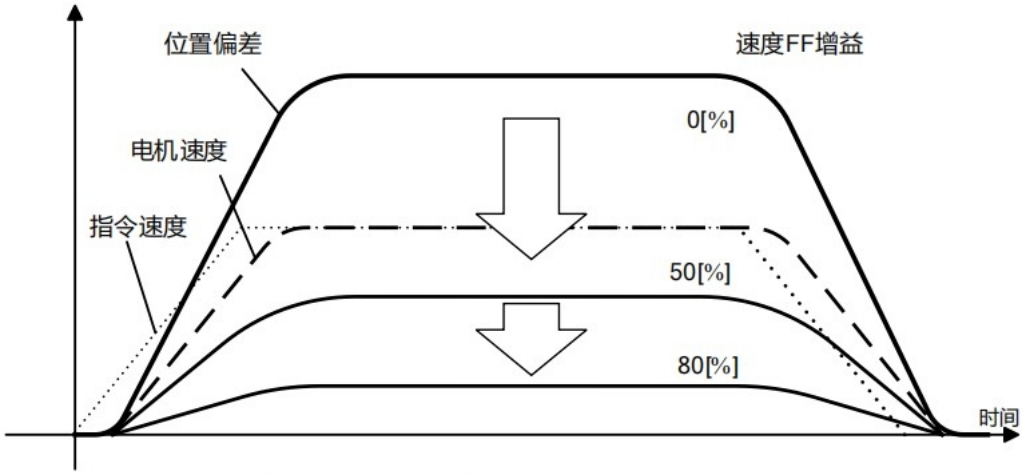

The position deviation of the speed in a certain domain decreases with the increase of the speed feedforward gain

Figure 5-13 Relationship Between Speed Feedforward Gain and Position Deviation

Speed feedforward function operation steps:

A) Set the Speed Feedforward Signal Source

Set P13.12 (speed feedforward control selection) to a non-zero value, and the speed feedforward function is enabled. The speed feedforward signal source can be selected from internal and external, as shown in the following table.

Table 5-5 Speed Feedforward Control and Selection Function Codes

FC	name	set value	remarks
P13.12	Speed feedforward control selection	0-no speed feedforward	—
		1-Internal speed feedforward	The speed information corresponding to the position instruction is taken as the source of the velocity feedforward signal.
		2-Use AI1 as a speed feedforward input	Use AI1 as the source of the velocity feedforward signal.
		3-Use AI2 as a speed feedforward input	Use AI2 as the source of the velocity feedforward signal.

B) Setting Speed Feedforward Parameters

Including speed feedforward proportional gain (P6.08) and speed feedforward filter time (P07.06).

Table 5-6 Speed Feedforward Parameter Function Code

FC	name	Adjustment notes
P07. 06	Speed feedforward filter time	Reducing the filter time can suppress the speed overshoot during acceleration and deceleration; increasing the filter time can suppress the noise in the case that the position command update cycle is longer than the driver control cycle, the pulse frequency of the position command is not uniform, and the jitter of the positioning completion signal is suppressed;
P06. 08	Speed feedforward proportional gain	See Figure 5-13

Torque prefeed

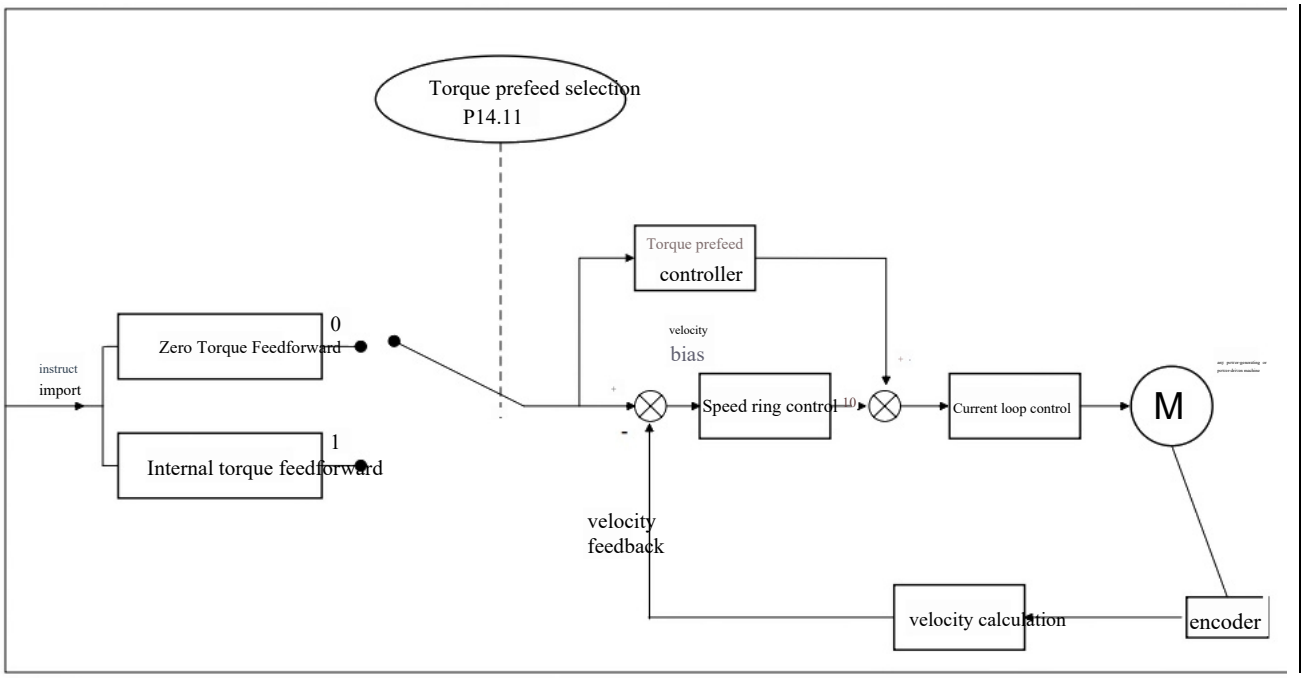

Figure 5-14 Torque Feedforward Control Operation Diagram

Position control mode with torque feedforward enhances dynamic speed response and reduces position tracking deviation during fixed acceleration/deceleration processes. To implement this function, an appropriate negative load torque inertia ratio must be configured. Refer to Section 5.2.1 in the manual for detailed implementation guidelines. When the torque feedforward gain is set to a non-zero value, the system activates the torque feedforward function. By increasing the torque feedforward gain, position deviations during constant acceleration/deceleration can be controlled to near-zero levels. This configuration enables precise tracking of trapezoidal motion profiles when no external torque interference exists. The torque feedforward gain should be set to a non-zero value to activate this feature, as demonstrated in the manual's "Mechanical Load Identification Results" section.

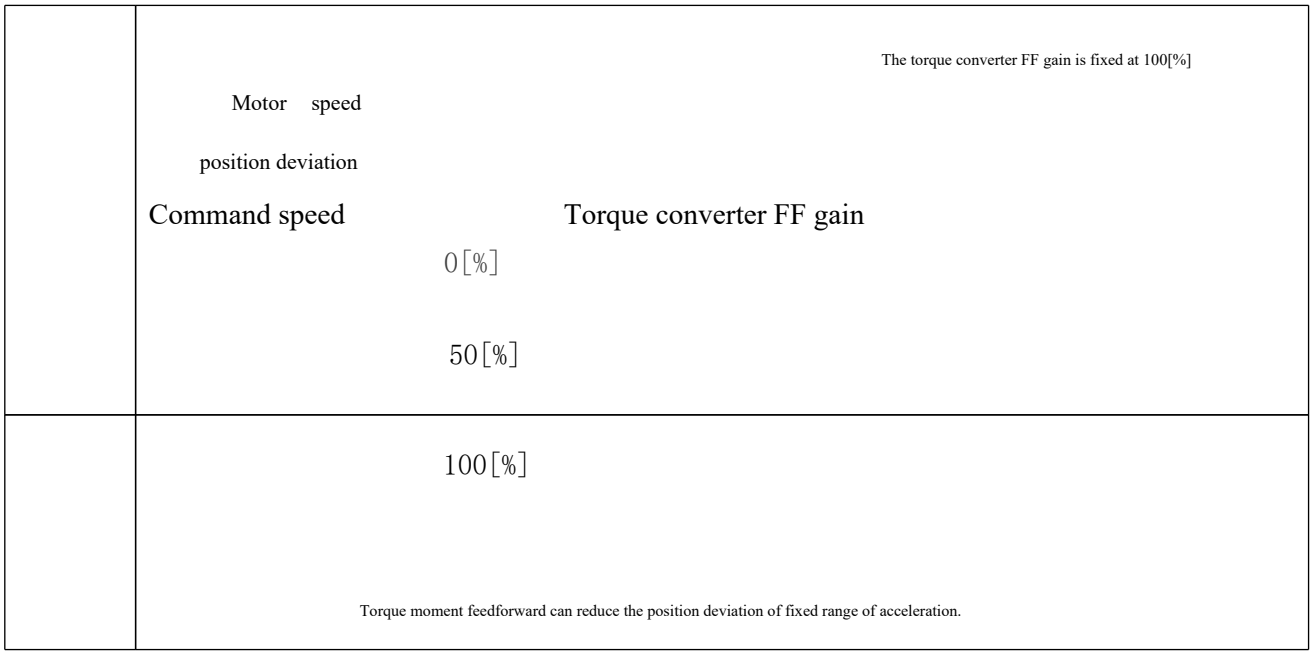

FIG. 5-15 Relationship Between Torque Feedforward Gain and Position Deviation of Acceleration and Deceleration Section

Operation steps of torque feedforward function:

A) Set the Torque Feedforward Signal Source

When P14.11 (torque feedforward selection) is set to a non-zero value, the torque feedforward function is enabled and the source of the feedforward signal can be selected from internal and external sources as shown in the following table.

Table 5-7 Function Codes for Speed Feedforward Control Selection Parameters

FC	name	set value	remarks
P14. 11	Torque prefeed control options	0-no torque feedforward	
		1-Internal torque feedforward	The speed command is used as the source of the torque feedforward signal. In position control mode, the speed command comes from the output of the position controller.

B) Set the Torque Feedforward Parameter

Including torque feedforward proportional gain (P06.09) and torque feedforward filter time (P 07.07,..

Table 5-8 Speed Feedforward Parameter Function Code

FC	name	Adjustment notes
P07. 07	Torque prefeed filter time	Function of parameters: Increasing P06.09 can improve the response, but overshoot may occur during acceleration and deceleration; Reducing P07.07 can suppress the overshoot during acceleration and deceleration; increasing P07.07 can suppress the noise; regulation means： When adjusting, first, keep P07.07 as the default value; then, gradually increase the set value of P06.09 from 0 until the torque feedforward effect is achieved at a certain set value. When adjusting, repeatedly adjust P07.07 and P06.09 to find a balanced setting
P06. 09	Torque moment feedforward proportional gain	

(3) Two degree of freedom control

In the non-torque control mode, the two-degree-of-freedom control coefficient can be used to improve the control effect. If it is set to 100%, it is the ordinary PI control mode; if it is set to non-100%, it is the two-degree-of-freedom control, which can be used to increase the resistance to external forces and improve the speed response waveform.

The figure below shows how the two degree of freedom control coefficient improves slow speed rise and slow positioning.

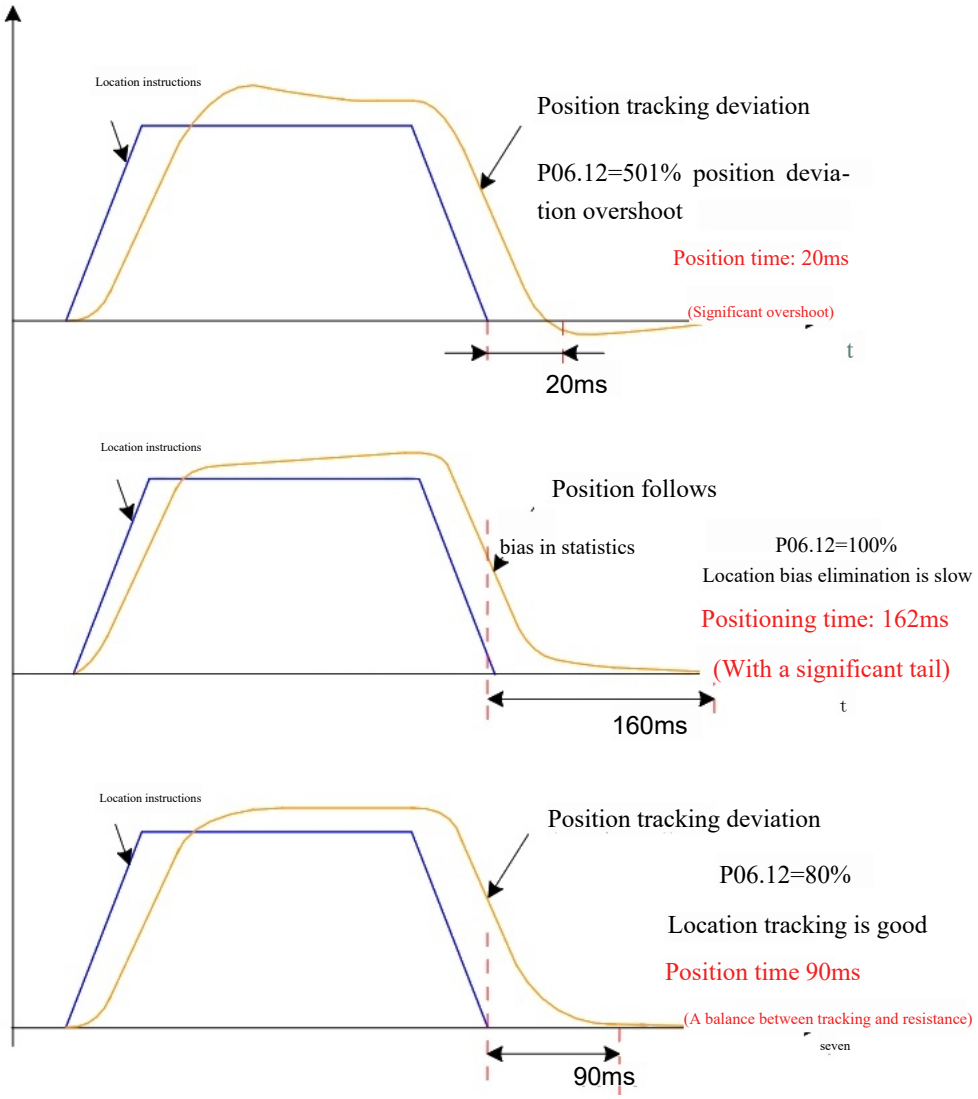

Figure 5-16. Two Degree of Freedom Control Example

The two-degree of freedom control adjusts the speed ring control method to enhance the anti-interference ability of the speed ring and improve the followingness of the speed command.

Table 5-9 Two-Degree of Freedom Feed-in-Coefficient Function Code

FC	name	Adjustment notes
P06. 12	Two-degree-freedom feed-forward coeffic-ient	**Function of parameters:** **In the non-torque control mode, the control method of the speed ring is changed.** **regulation means：** **P06.12 is set too small, and the response of the speed ring is slow;** **When the speed feedback has overshoot, gradually reduce P06.12 from 100.0 until the effect of two-degree-of-freedom control is achieved at a certain set value. When P06.12=100.0, the speed loop control method remains unchanged, which is the default proportional-integral control.**

5.2.3 REVENUE EXCHANGE

Gain switching is only effective in position and speed control mode and can be triggered by the internal state of the servo or an external DI. Using gain switching can serve the following purposes:

When the motor is enabled to be stationary, the position locking state can be switched to a lower gain to suppress vibration and reduce stationary noise;

During the motor stop process, the position can be switched to a higher gain to shorten the positioning time;

In the running state of the motor, you can switch to a higher gain to obtain better command tracking performance;

You can switch between different gain Settings based on the load equipment by using external signals.

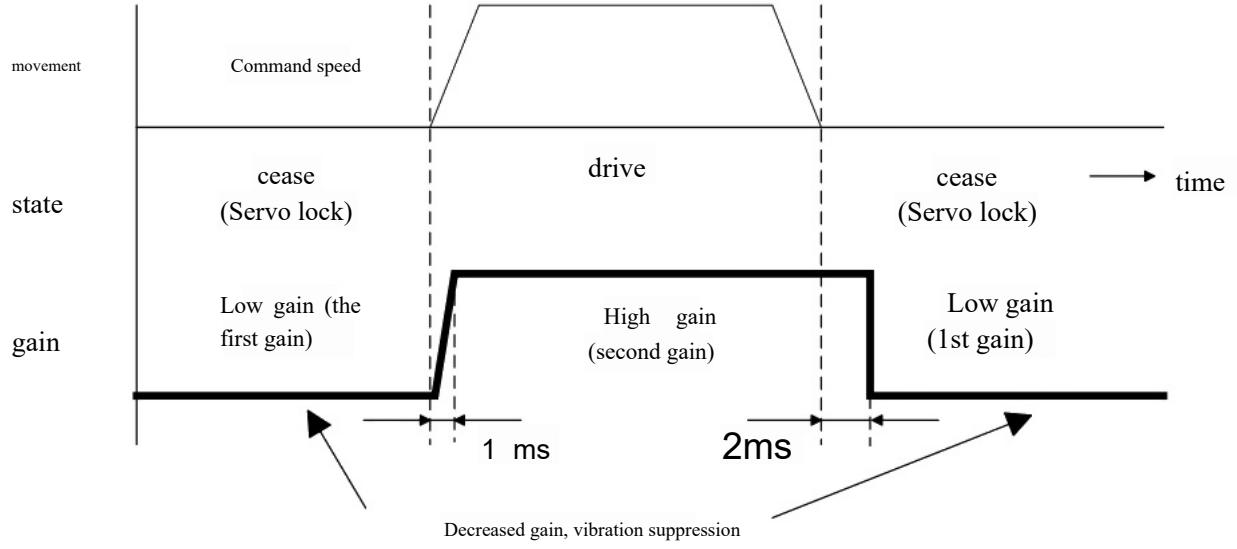

Figure 5-17 Schematic Diagram of Gain Switching

give an exam-ple :

In the LED die bonding machine application scenario, the servo has high speed, high precision and high response requirements. It is a typical application of fast positioning P2P. The gain switching function can not only ensure the rapid setting requirements, but also reduce the noise of the servo when it is stationary.

Table 5-10 Speed Gain Adjustment Steps

parameter group	Gain switching adjustment steps	Do not use the gain switch, manual gain adjustment		The second increment is the same as the base increment		Enable gain switching		When the system is stationary, adjust the first group of gain parameters to eliminate the stationary noise
P06	Speed ratio gain 1	35.0Hz						27.0Hz
P06	Speed integral gain 1	16.00ms						
P06	Position proportional gain 1	63.0Hz						
P07	Torque filter 1	0.65ms						0.84ms
P06	Speed ratio gain 2			35.0Hz				
P06	Speed integral gain 2			16.00ms				
P06	Position proportional gain 2			63.0Hz				
P07	Torque filter 2			0.65ms				
P06	Gain switching-mode selection	0				1		
P06	Gain switching-conditional selection					10		
P06	Load inertia ratio	It is obtained by inertial identification						

The HR3 series servo supports the following 10 gain switching methods, of which 1 is external DI switching and 9 are based on the internal motion state of the servo:

0 First gain fixed (PS)

1: Use external DI for switching (PS)

2: Large torque command (PS)

3: Speed command is large (PS)

4: The rate of change of speed command is large (PS)

5: high and low speed threshold of speed instruction (PS)

6: Large positional deviation (P)

7: There are position instructions (P)

8: Positioning incomplete (P)

9: Actual speed (P)

10: There is a position instruction + actual speed (P)

Among them, (P) represents that the switching mode only supports position control mode, and (PS) represents that the switching mode supports both position control and speed control modes. The following is a further description of the switching of 9 kinds of internal servo switching modes.

Table 5-11 Internal Switching Mode Variation of Servo

Gain switching mode	Switching method variation diagram
2: The torque command is large	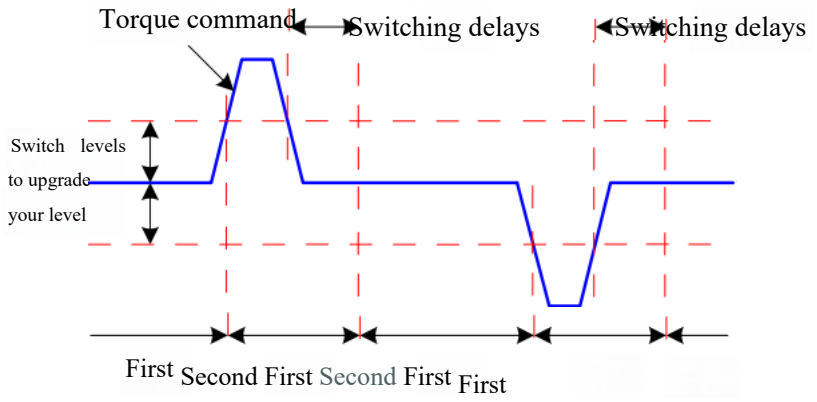
3: Speed command is large	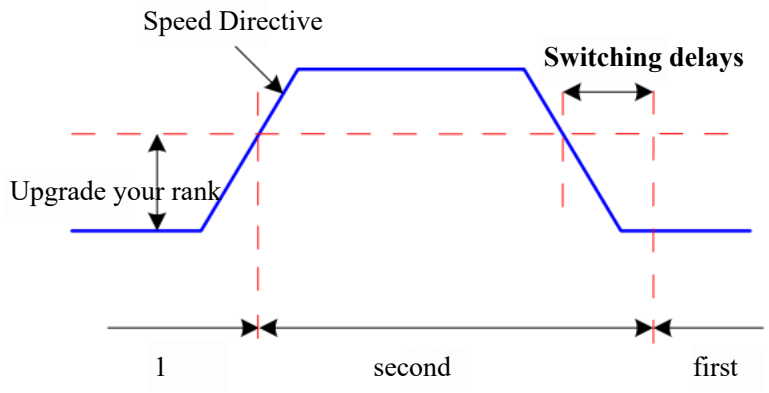
4: The rate of change of speed command is large	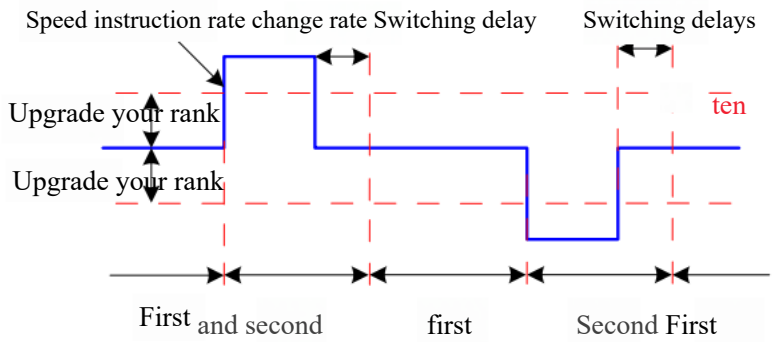

Gain switching mode	Switching method variation diagram
5: high and low speed threshold of speed instruction	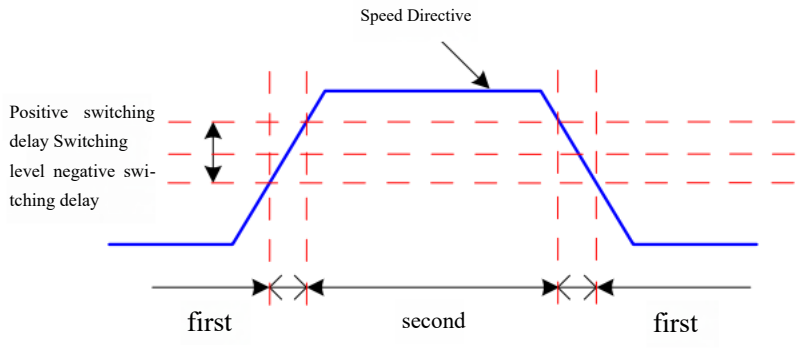
6: Large positional deviation	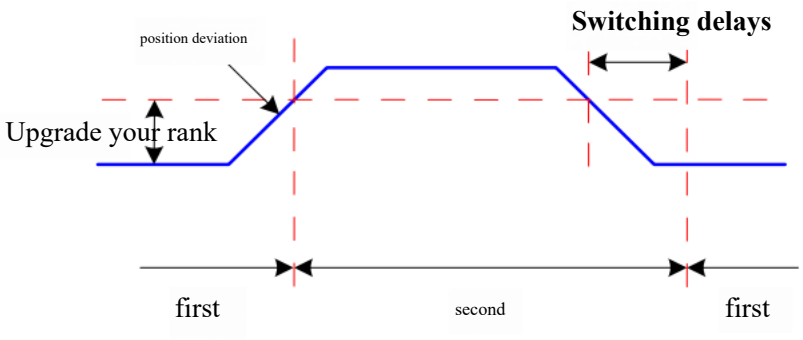
7: There are position instructions	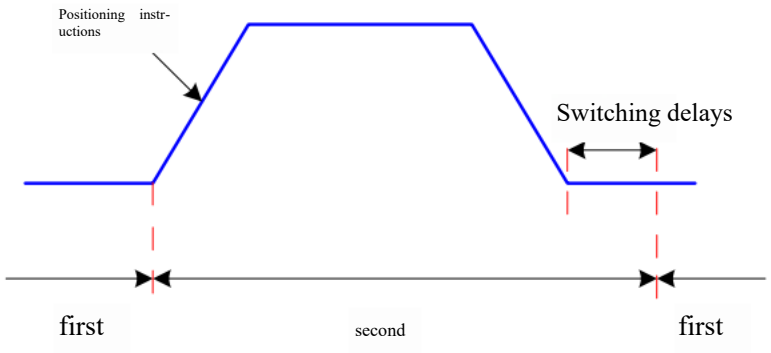

Gain switching mode	Switching method variation diagram
8: Positioning incomplete	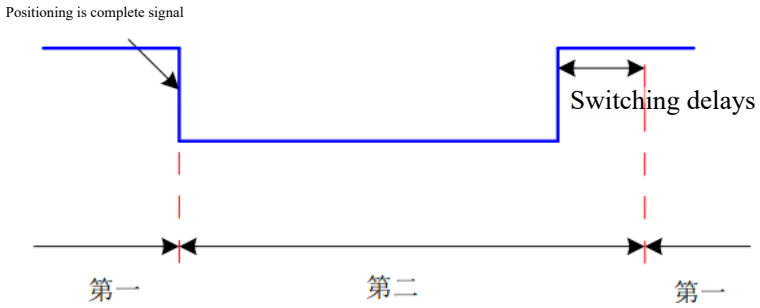
9: Actual speed	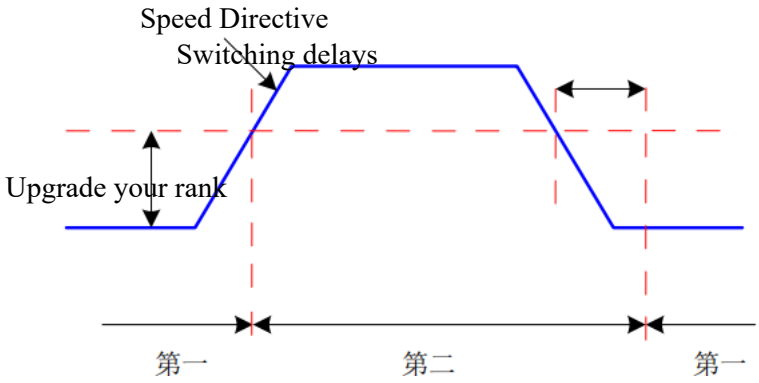
10: There is a position instruction + actual speed	The combination of mode 7 and mode 9 is generally selected to ensure rapid and stable adjustment

pay attention to：

Delay time "P06.17" is only valid when the second gain is switched to the first gain.

Table 5-12 Gain Parameter Function Codes

FC	P06.15-Gain Switching-Mode Settings	P06.16-Gain Switching-Condition Selection	P06.17-Gain Switching-Delay	P06.18-Gain Switching-Levels	P06.19-Gain switching time delay	P06.20-Gain switching time
unit	–	–	ms	–	–	ms
Windows default	1	0	5.0	50	30	3.0
least value	0: First gain fixed, using external DI for P/PI switching 1: The first gain and the second gain are switched effectively. The switching condition is P06.16	0: First gain fixed (PS) 1: Switching using external DI (PS) 2: Large torque command (PS) 3: Large speed command (PS) 4: The rate of change of speed command is large (PS) 5: High and low speed threshold (PS) for speed command 6: Large positional deviation (P) 7: There is a position instruction (P) 8: Positioning incomplete (P) 9: Actual speed (P) 10: There is a position instruction + actual speed (P)	0	0	0	0
crest value			1000.0	20000	20000	1000.0
Establishment, effective mode	Run Settings / Go Now	Run Settings / Go Now	Off setting / Effective immediately	Off setting / Effective immediately	Off setting / Effective immediately	Off setting / Effective immediately

5.2.4 Automatic Gain Adjustment

Automatic gain adjustment means that the HR3 series servo driver will automatically generate a set of matching basic gain parameters internally according to the "P1A group-advanced adjustment function-response level selection" parameter setting, so as to meet the requirements of speed and stability.

HR 3 series servo provides two automatic gain adjustment modes: 1. Basic mode; 2. Positioning mode.

pay attention to：

Make sure you get the load inertia ratio correctly before using the auto gain adjustment function!

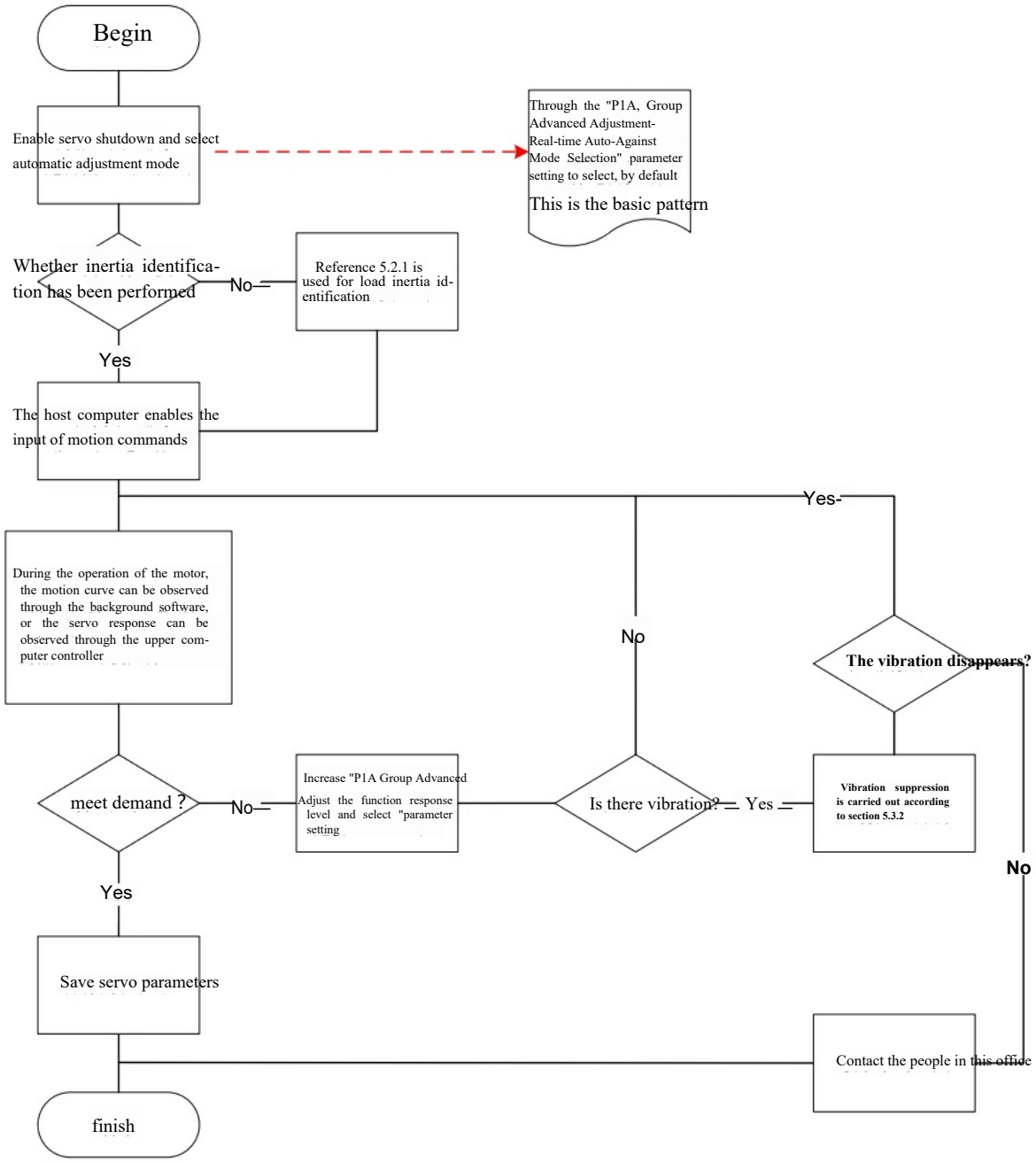

Figure 5-18 Automatic Gain Adjustment Steps

(1) Standard rigid table mode

Real-time adaptive adjustment settings-Standard Rigid Table Mode (P1A.00=1) is suitable for most applications, with the response level (P1A.01) ranging from 0 to 40 levels. Higher response levels provide stronger gain and faster response times. For different load types, the following empirical values are recommended:

Table 5-13 Reference Response Levels

Recommended response level	Type of load mechanism
Level 4-8	Some large machinery
Levels 8-15	Rigid applications such as belts
Levels 15-20	Rolling screw, direct connection and other applications with high rigidity
Levels 20-40	Directly connected to high rigidity, small inertia load applications

Real-time self-adjustment setting-standard rigid table mode (P1A.00=1), basic gain (P06.00~02, P07.02) parameters, automatically updated according to the response level set by P1A.01 and stored in the corresponding function code:

Table 5-14 Automatic Update Parameters of Real-Time Automatic Adjustment Mode

FC	name
P06.00	Speed ratio gain 1
P06.01	Speed integral gain 1
P06.02	Position proportional gain 1
P07.02	Torque filter 1

(2) Quick location mode

Quick positioning mode (P1A.00=2) The background software parameters are set as follows,

Basic parameters communication parameters trajectory planning ease of use parameters

Present [P1A Advanced Adjustments] Extended parameters

[P20 Auxiliary parameters][P21 Fault diagnosis parameters][P22 Full closed-loop parameters]

From the [P23 virtual IO parameters]

	1 J.V. From I P		
	mailing address	Parameter name	set value
☑	P1A00	Real-time self-adjustment setting	2-Quick location mode
	P1A01	Response level setting	
☐	P1A02	Vibration suppression mode selection	--
☐	P1A03	* Inertial identification mode selection	
	P1A04	※Low frequency vibration suppression selection	--
	P1A05	※Offline inertia identification Settings	--
	P1A06	Maximum speed of inertial identification	--
	P1A07	Inertial identification acceleration time	--
	D1△08	Inertia distinguishes the mouth of the sheng from time	

Figure 5-19 Quick Location Mode Settings

The rapid positioning mode within the HR3 servo automatically implements the gain switching function described in Section 5.2.3 and the feedforward control function introduced in Section 5.2.2, organically integrating both to achieve rapid positioning effects. Building upon the "Automatic Adjustment-Standard Rigidity Table," the second gain parameters (P06.03~05, P07.03) are automatically updated according to the response level set in P1A.01 and stored in corresponding function codes. Notably, the position loop gain of the second gain parameter should be one response level higher than that of the first gain parameter.

Table 5-15 Automatic Update Parameters for Quick Location Mode

FC	name
P06.03	Speed ratio gain 2
P06.04	Speed integral gain 2
P06.05	Position proportional gain 2
P07.03	Torque filter 2

The speed feedforward correlation parameter is set to a fixed value:

Table 5-16 Fixed Parameters for Quick Positioning Mode

FC	name	parameter values
P06.08	Speed feedforward proportional gain	30.0%
P07.06	Speed feedforward filter time	0.50ms

Gain switching related parameters are set to fixed values:

In fast positioning mode, the gain switching function is automatically enabled.

Table 5-17 Gain Parameters for Fast Positioning Mode

FC	name	parameter values	explain
P06.15	Gain switching-mode selection	1	In the fast positioning mode, the first gain (P06.00~02, P07.02) and the second gain (P06.03~05, P07.03) are switched effectively; In addition to the fast positioning mode, the original setting is maintained.
P06.16	Gain switching condition selection	10	In fast positioning mode, the gain switching condition is P06.16; Except for the fast positioning mode, the original setting is maintained.
P06.17	Gain switching-delay	5.0ms	In fast positioning mode, the gain switching delay time is 5.0ms; In addition to the fast positioning mode, the original setting is maintained.
P06.18	Gain switching level	50	In fast positioning mode, the gain switching level is 50; In addition to the fast positioning mode, the original setting is maintained.
P06.19	Gain switching delay	30	In fast positioning mode, the gain switching delay is 30; In addition to the fast positioning mode, keep the original Settings

pay attention to：

In automatic gain adjustment mode, parameters automatically updated with the response level selection (P1A.01) and parameters fixed in value cannot be manually modified. To modify them, P1A.00 must be set to 0 to exit real-time automatic adjustment mode.

Table 5-18 Advanced Adjustment Function Codes

FC	P1A. 00-Real-time self-adjustment setting	P1A. 01-Response level setting
accessibility	Read/writable	Read/writable
unit	–	
Windows default	7	16
least value	0 Invalid 1: Standard rigid table pattern 2: Quick location mode 5: Adaptive interpolation mode 7: Adaptive positioning mode	0
crest value		40
Setting, effective manner	Run Settings / Go Now	Run Settings / Go Now

5.3 Vibration Abatement

5.3.1 notch filter

When the servo gain coefficient is relatively high, high-frequency vibration components cannot be effectively attenuated, potentially triggering system resonance. To maintain servo response performance without compromising it, effective resonance suppression becomes essential for stable mechanical load driving without reducing gain. Typically, servo manufacturers install notch filters in the pre-control loop channel to specifically weaken the gain amplitude at resonance points, thereby achieving vibration suppression.

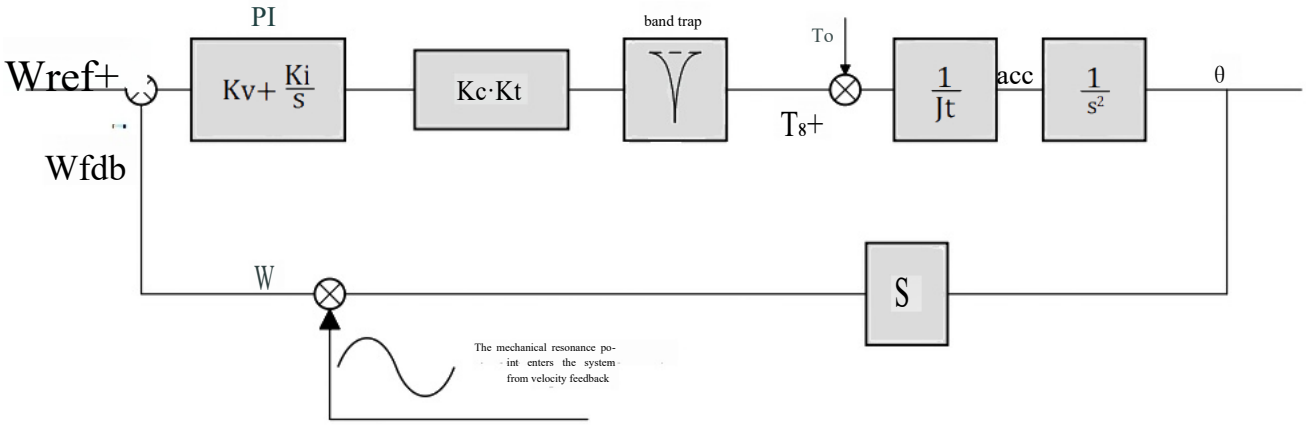

Figure 5-20 Resonance Suppression Control Block Diagram

The transfer function of the notch filter is,

$$G_{notch}(s) = \frac{s^2 + 2\zeta_1\omega_n s + {\omega_n}^2}{s^2 + 2\zeta_2\omega_n s + {\omega_n}^2}$$

5.3.2 Vibration Abatement

HR3 series servo has built-in adaptive vibration suppression algorithm. In the actual operation process, the vibration components in the motor speed are extracted to infer the resonance frequency and automatically set the relevant parameters of adaptive notch filter to achieve the purpose of vibration suppression.

(1) Automatic notch filter

To enable the adaptive notch filter function, simply set "P1A Group-Advanced Adjustment-Vibration Suppression Mode Selection" to 1 or 2 in the background software. The HR3 series servo supports up to four adaptive notch filters. When the system has five or more resonance points, manual configuration of notch filters becomes necessary, with a maximum of four different notch frequencies supported.

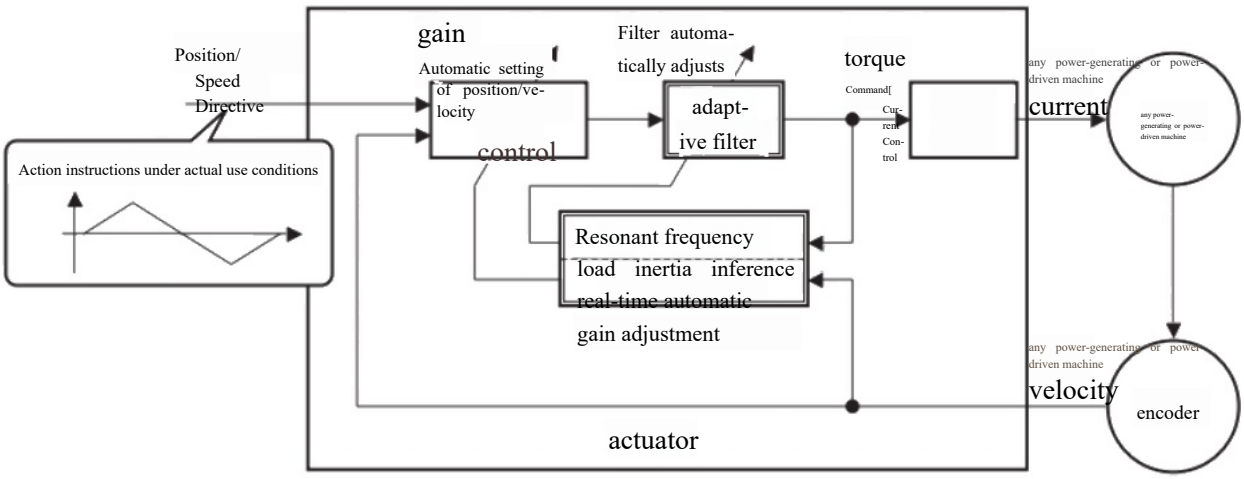

Figure 5-21 Block Diagram of Adaptive Vibration Suppression Principle

pay attention to：

Under the following conditions, normal automatic vibration suppression may not be possible. In such cases, manual vibration suppression should be performed.

Table 5-19 Factors Affecting Adaptive Vibration

	Factors affecting adaptive vibration suppression
resonance characteristics	■ When the resonance frequency is lower than the velocity response frequency ■ When there are more than three resonance points ■ When the vibration amplitude is small or the control gain is low, the influence on the motor speed is not obvious
mechanical properties	■ Nonlinear factors such as excessive meshing clearance or excessive backlash during forward and reverse operation, for example, gear transmission mechanism, gear installation eccentricity ■ The vibration components appear randomly and for a short time
Physical condition	■ Accelerate and decelerate rapidly, when the acceleration is greater than 30000rpm/s ■ When the servo is operating in torque mode

(2) Manual notch filter

A) Analyze the resonance frequency;

When using a manual notch filter, the frequency of the notch filter needs to be set to the actual resonant frequency.

The resonance frequency can be obtained through the oscilloscope interface of the drive debugging platform in two ways:

① The motor current (phase current, torque command, and current feedback) is obtained by displaying the motor current on the oscilloscope interface. As shown in the figure below, the measured cycle is obtained

The period is 0.625ms, and the resonance frequency is calculated as:

f=1/t=1600 Hz

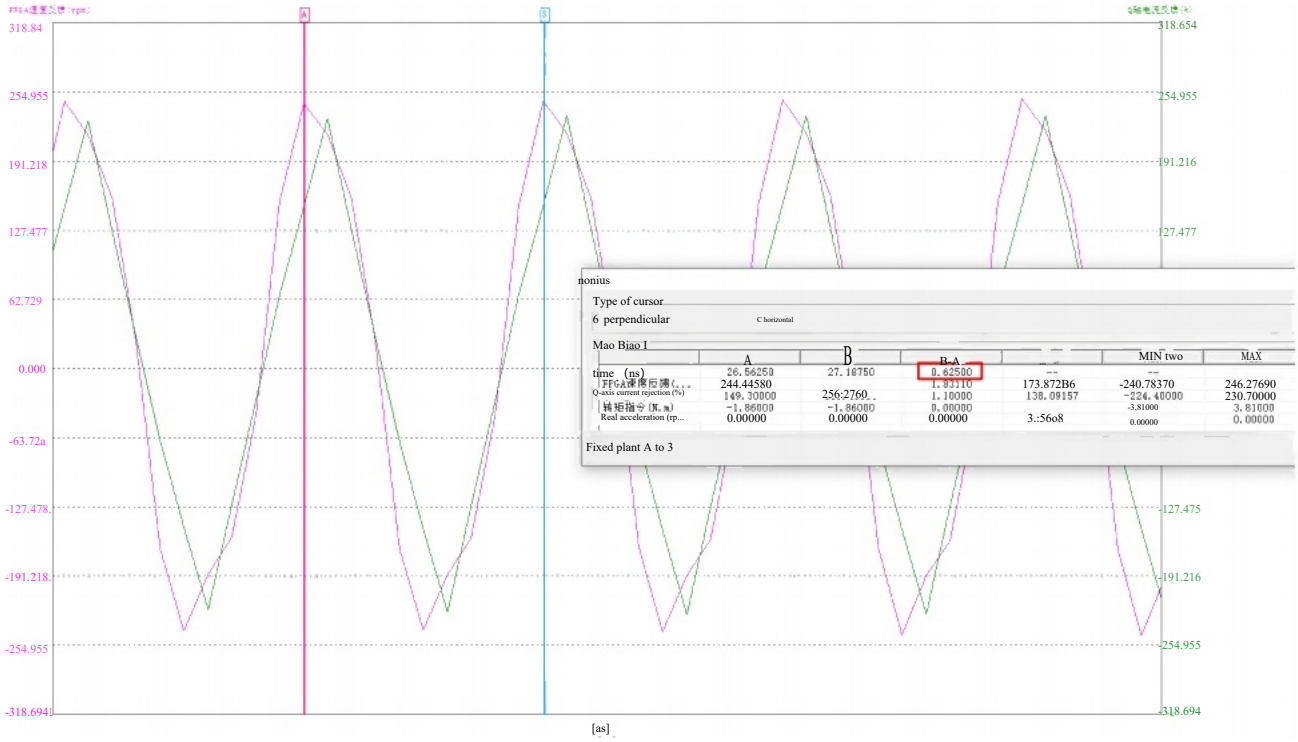

Figure 5-22 Screenshot of Resonance Frequency of Background Software Test

② It is obtained through the "resonance point identification" function of the oscilloscope interface. As shown in the figure below, the measured resonance frequency is 1593.750Hz .

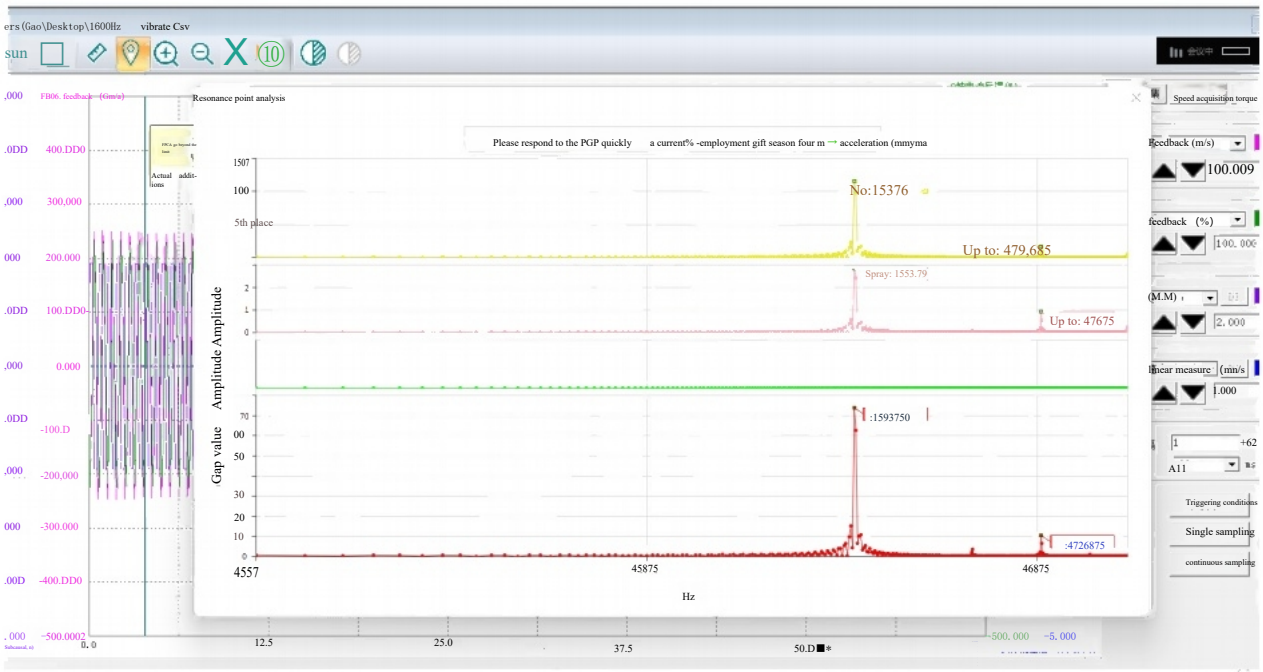

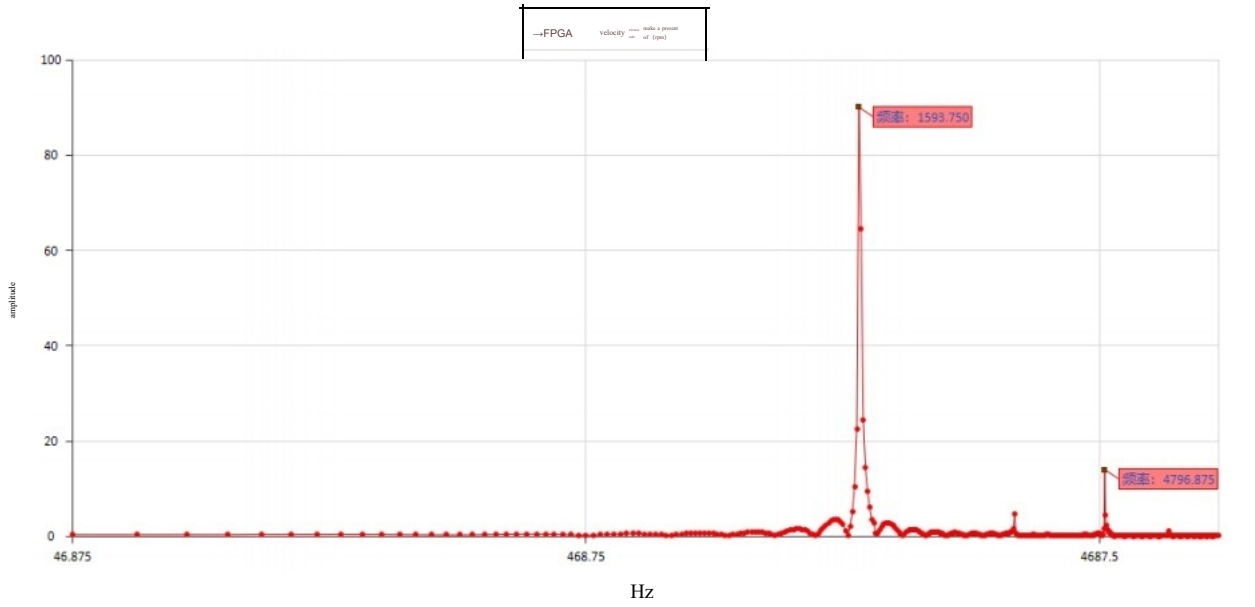

Figure 5-23 Screenshot of Resonance Point Recognition Function of Background Software

B) The Resonant Frequency Obtained in Step A) Is Input Into the Notch Filter Frequency Parameter, and Other Parameters Are Generally Not Set;

mailing address	Parameter name	set value	current value	Factory value	unit	span
P0710	Vibration suppression frequency 1	--	--	5000	Hz	[50, 5000]
P0711	Vibration suppression bandwidth 1	--	--	2	-	[0, 20]
P0712	Vibration suppression attenuation 1	--	--	0	-	[0, 99]
P0713	Vibration suppression frequency 2	--	--	5000	Hz	[50, 5000]
P0714	Vibration suppression bandwidth 2	--	--	2	-	[0, 20]
P0715	Vibration suppression attenuation 2	--	--	0	-	[0, 99]
P0716	Vibration suppression frequency 3	--	--	5000	Hz	[50, 5000]
P0717	Vibration suppression bandwidth 3	--	--	2	-	[0, 20]
P0718	Vibration suppression attenuation 3	--	--	0	-	[0, 99]
P0719	Vibration suppression frequency 4	--	--	5000	Hz	[50, 5000]
P0720	Vibration suppression bandwidth 4	--	--	2		[0, 20]
P0721	Vibration suppression attenuation 4	--	--	0	-	[0, 99]
P0722	Vibration suppression frequency 5	--	--	5000	Hz	[50, 8000]
P0723	Vibration suppression bandwidth 5	--	--	2	-	[0, 20]
P0724	Vibration suppression attenuation 5	--	--	0	-	[0, 99]
P0725	Vibration suppression frequency 6	--	--	5000	Hz	[10, 5000]
P0726	Vibration suppression bandwidth 6	--	--	2		[0, 20]
P0727	**Vibration suppression attenuation 6**	--	--	0	-	[0, 99]

FIG. 5-24 Parameter Setting of Notch Filter

If the resonance is suppressed, it indicates that the notch filter has achieved the effect, and the gain can be adjusted. If a new resonance occurs after increasing the gain, repeat steps A) ~B);

If the vibration cannot be eliminated for a long time, please close the servo enable in time and reduce the loop gain.

(3) low pass filter

Alternatively, by configuring an appropriate torque low-pass filter, all high-frequency vibration components above the cutoff frequency can be attenuated to below a sensitive threshold. The torque command filtering can be adjusted through the backend debugging software via the "P07 Group Filter Parameters-Torque Command Filtering Time Constant" parameter setting.

By setting the filter time constant, the torque command is attenuated in the high frequency band above the cutoff frequency to achieve the purpose of suppressing mechanical resonance.

The low-pass filter setting parameter of the torque is the filter time constant, which is 0.01ms. The conversion relationship between the filter time constant Tm and the filter cutoff frequency fc is:

$$f_c = \frac{1}{2\pi \times \tau_m \times 0.001}$$

5.4 Common application scenarios

5.4.1 Rolling screw load

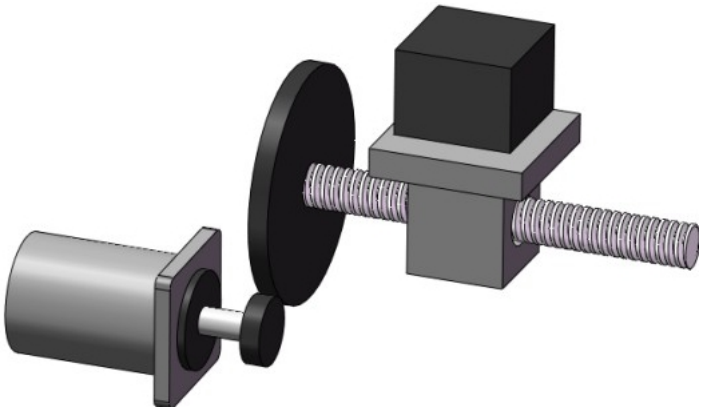

Figure 5-25 Ball Screw Transmission Chain

(1) Features of ball screw

The small resistance to friction and the small difference between static and dynamic friction can ensure the smooth movement and do not easily produce low-speed crawling phenomenon. The wear is small, the service life is long and the precision retention is good.

After double nut preloading, the gap can be well eliminated and the transmission stiffness is high.

Friction loss is small, transmission efficiency is high, up to 90%~96%.

(2) Debugging notes

> The screw rod has high load transmission stiffness, which is generally easy to adjust. Under the condition of reasonable inertia ratio, it only needs to identify the inertia and adjust the automatic gain according to Section 5.2.4.

If the response performance is required to be high, it is also necessary to make necessary manual gain adjustment according to section 5.2.2 manual gain adjustment introduction, and even resonance analysis and suppression are required. Reference section 5.3 vibration suppression.

5.4.2 Sync Tape Load

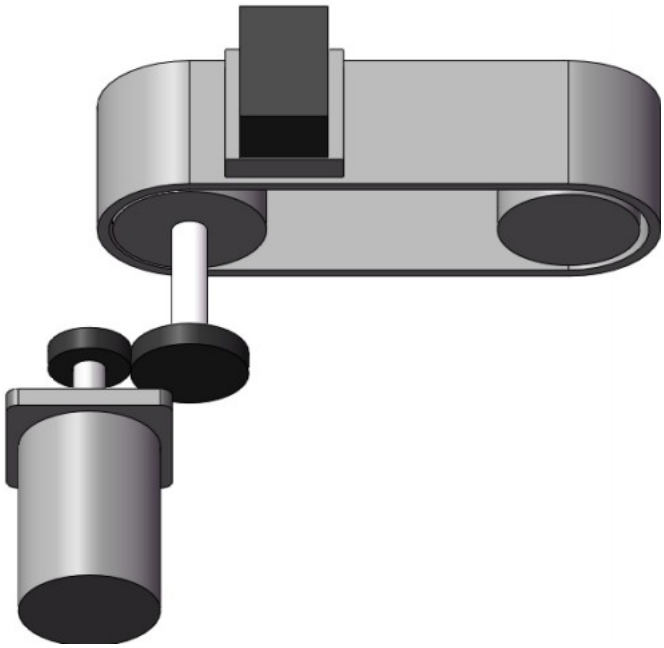

Figure 5-26 Synchronous Belt Drive Chain

(1) Features of synchronous belt drive

During operation, the teeth of the synchronous belt mesh with the tooth groove of the pulley to transmit motion and power. There is no sliding in the process of work, and there is an accurate transmission ratio, so it is called synchronous belt. High transmission efficiency, good energy saving effect. There is a high transmission efficiency, generally up to 98%. The transmission ratio is large, the structure is compact, and the rigidity is weak.

(2) Debugging notes

The shorter synchronous belt is still easy to debug. Under the condition of reasonable inertia ratio, it only needs to identify the inertia ratio and adjust the automatic gain.

If the synchronous belt is relatively long and the inertia is relatively large, it is easy to produce overshoot and overtuning during operation.

The position command form requires higher requirements, so the position command filtering can be carried out under the servo.

5.4.3 Gear Rack Load

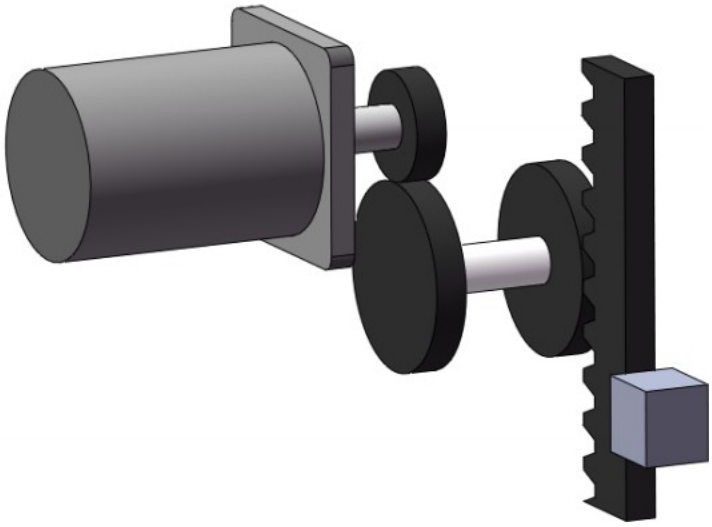

Figure 5-27 Gear Rack Transmission Chain

(1) Gear rack transmission characteristics

The deceleration ratio can be configured to a large extent, and the load driving capacity is strong. The output torque can be increased by reducing the operating speed of the load.

The transmission back gap is large, which will lose part of the transmission accuracy.

(2) Debugging notes

> Reducing speed reducer can generally reduce the load inertia ratio effectively, so the inertia ratio of this equipment is relatively small, debugging is simple, and automatic gain adjustment is generally used.

The installation rigidity of the rack at different positions may be different, and the machining accuracy of the rack may be different. It is necessary to ensure that there is no vibration and no running noise in the whole operation range.

5.4.4 Inertial Disc Load

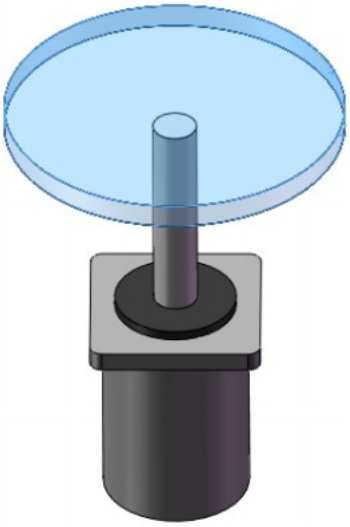

Figure 5-28, Direct Connection to the Inertia Disk

(1) Direct coupling inertia disk load characteristics

The direct-connected inertia disk has good transmission accuracy.

Highly synchronous with the motor, no back gap, high transmission rigidity.

The anti-resonance frequency is low. According to the anti-resonance point, the maximum bandwidth of the system should be lower than the anti-resonance point except far away from the resonance point.

(2) Debugging notes

This connection mode will inevitably bring a large inertia ratio to the motor, so the speed gain can not be set too high.

> The vertical installation condition of the motor is commonly used in the application of fractional control, which requires fast and accurate start and stop. You can refer to section 5.2.3 for adjustment using gain switching.

In the horizontal installation condition of the motor, the inertia is generally larger and more prone to vibration; the gain should not be set too high, and resonance analysis and suppression are required.

5.4.5 Long Cantilever Load

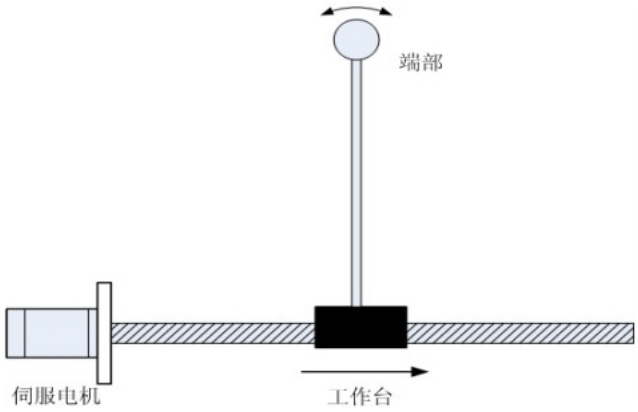

Figure 5-29 Long Cantilever Load

When handling long cantilever loads during high-speed operation, equipment often exhibits end-tip vibration or overall shaking. These vibrations can be effectively suppressed by filtering out frequency components from position commands. The HR3 series servo provides vibration suppression filters that efficiently counteract end-tip vibrations, with support through backend software.

The parameter "P07 filter parameter-location notch frequency A" is set to suppress low-frequency jitter.

Basic parameters of the majority of women in J, North Lruz
Shen [P03 IO parameters]
[P04 Motion Control Parameters] [P05 Function Settings Parameters] [P06 Gain Parameters]
[P07 filter parameters]
[P00 Protection parameters
at field [P09 Display parameters]
communicational parameter
Trajectory planning from[POA Communication Parameters]
From [Position control parameters at P13][Speed control parameters at P14]
[P15 Torque control parameters][P16 Preset speed task parameters]
[Preset Position Task Parameters, P17]
rn1A Remarks π. Past 1

rU124 Yûki JP Kiri 1 or J

□	P0725	Vibration suppression frequency 6			5000	Hz
	P0726	Vibration suppression bandwidth 6		--	2	
□	P0727	Vibration suppression attenuation 6		--	0	
□	P0734	Note: Second order torque filter frequency			5000	Hz
□	P0735	Note: Second-order torque filter Q value		--	0.500	–
□	P0736	* Position regulator output filter...		--	0.00	ms
	P0737	※Input shaping filter frequency A		--	100.0	Hz
□	P0738	※Input shape filter order A		--	2	steps
	P0730	※Uru Seimei Filter Kyokushin A		--	1.0	–
	P0747	Location notch frequency A		--	100.0	Hz
	P0748	※ Location: A width		--	2	–
	P0749	※ Location陷波 frequency ratio A		--	1.2	
	P0769	Magnetic scale speed fluctuation suppression filter	--	--	0.50	ms
	P0770	※ MCU side STO signal filtering...	--	--	10	ms
□	P0772	Probe filtering	--	--	15	25ns
□	P0774	Low speed pulse instruction filter	---	--	30	25ns
□	P0775	High speed pulse instruction filter	--	--	3	25ns
□	P0776	Speed reaches signal filter	--	--	10	ms
□	P0777	* Speed display filter			50	ms

Figure 5-30 Screenshot of the Function Code "position Notch Frequency" on the Host Computer

There are two ways to obtain the vibration frequency:

The vibration frequency at the end of the mechanical load is obtained through the external sensor, as shown in Figure 5-31;

By observing the waveform of the background software, the vibration frequency of the motor end is obtained, as shown in Figure 5-32.

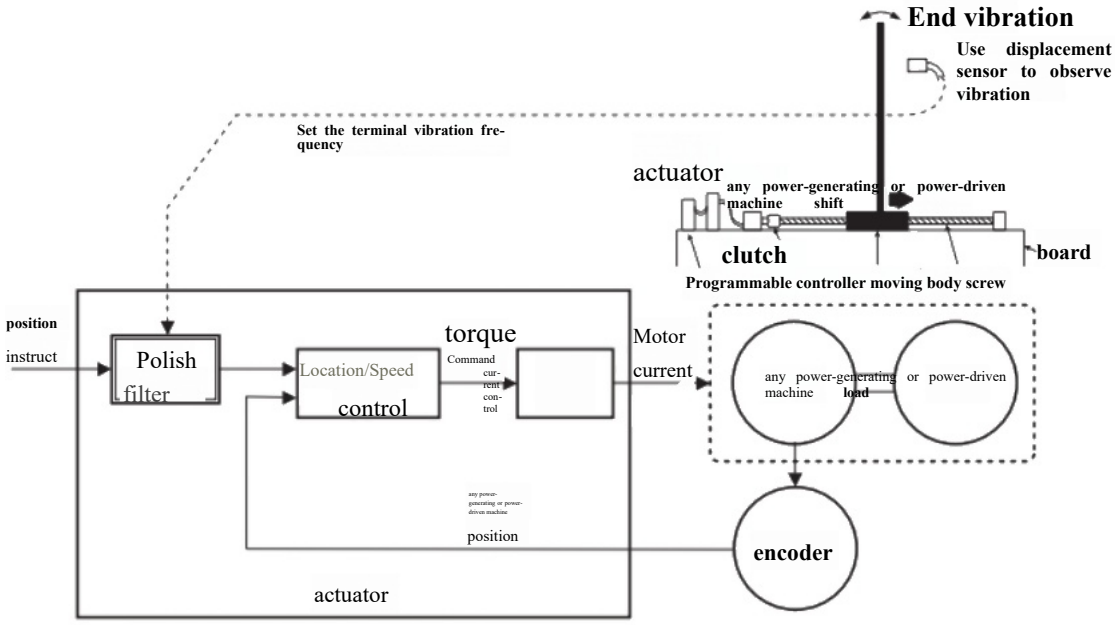

Figure 5-31 Method of Obtaining and Suppressing the Vibration Frequency of Long Cantilever Load

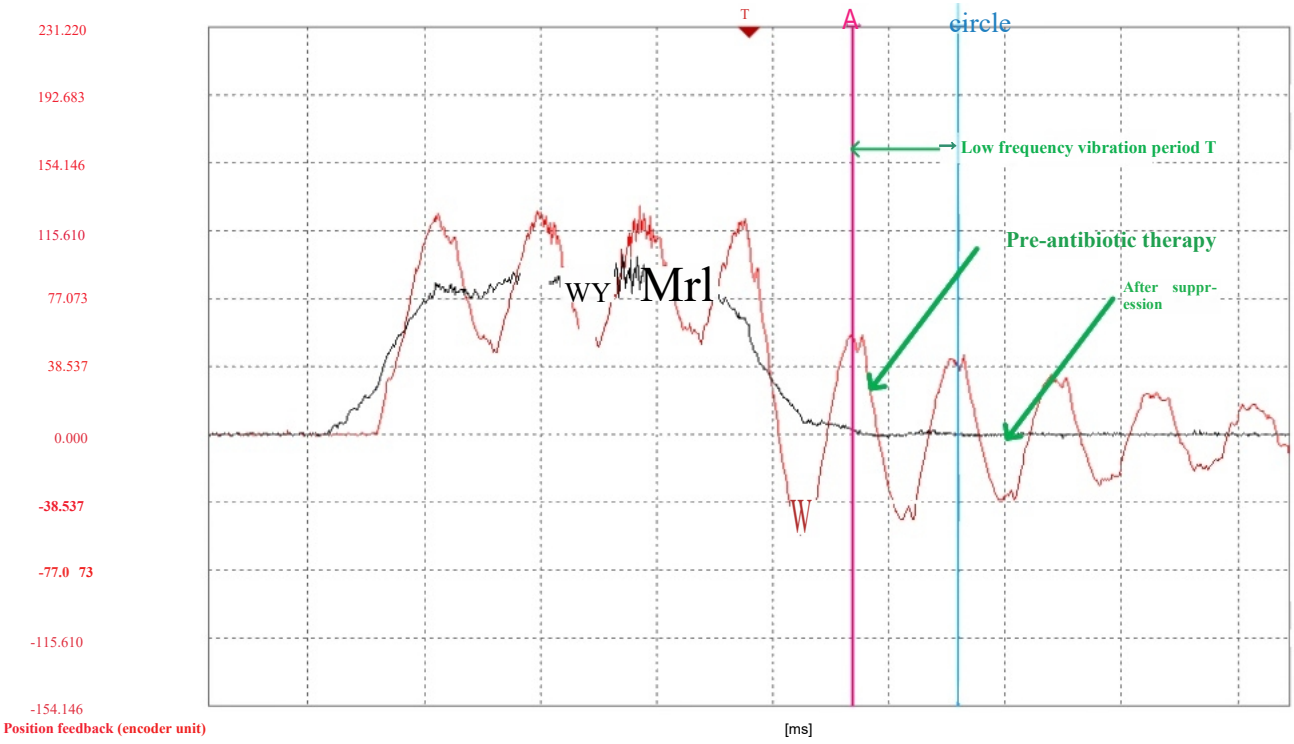

FIG. 5-32 Comparison of Load Vibration Frequency Acquisition and Suppression Before and After

After measuring the low frequency vibration period from the background, you can$f = \frac{1}{T}$, Calculate the low-frequency resonance frequency and directly set the "P07 filter parameter - location notch frequency A" parameter. Note that this parameter is in units of 0.1Hz.

Chapter 6 Faults and Warning Handling

6.1 Display and View

The HR 3 series servo alarms are categorized into faults and warnings. The key difference between these two types is that a fault causes the servo to stop operating, while a warning allows it to continue functioning normally. This manual provides detailed descriptions and troubleshooting methods for each type of alarm based on the display status shown on the control panel.

After power on, when the servo panel does not light up or the last three digits do not display "-dy", the possible causes and troubleshooting are as follows:

Table 6-1 Fault Handling Method for Power-on Servo Not Ready

order number	failure cause	Method of confirmation
1	Main power supply voltage fault	Refer to the specifications to confirm whether the driver is powered by 220VAC.
2	Servo driver failure	Contact the manufacturer's after-sales service.

After power on, when the servo fails or warns, the panel will give the corresponding display. The definition of each display is as follows:

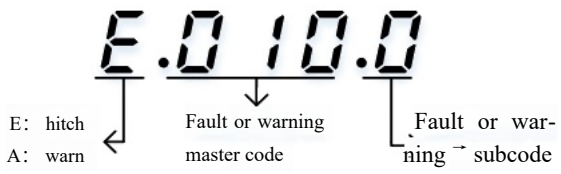

Figure 6-1 Fault Display Example

For example, the panel shows E.010.0, indicating that the servo driver has a fault with the main code 0x010 and subcode 0x0; the panel shows R.218.0, indicating that the servo driver has a warning with the main code 0x218 and subcode 0x0.

After excluding the above faults, the panel should display "rd9".

The HR 3 series servo drives have a fault logging function that records the names of the last 10 faults and warnings, as well as the status parameters of the servo drive at the time of occurrence. If a fault or warning occurs repeatedly in the last 5 times, the fault or warning code will only be recorded once in the driver status.

After a fault or warning is reset, the fault record will still retain the fault and warning. You can view and clear the historical records using the Fault & Warning Management module in the DriveStart debugging software. For details, refer to the DrivPRStart User Manual.

In addition, you can view a detailed description of the current fault and perform fault reset through the Fault & Warning Management module in DriveStart.

6.2 List of Faults

Table 6-1 List of Fault Codes

fault code	Fault name	Can it be reset
E. 010	Software parameter fault	×
E. 011	Software internal communication initialization fault	×
E. 012	Software version does not match product model fault	×
E. 013	Software internal interrupt timeout fault	×
E. 014	Software internal communication timeout fault	×
E. 015	Current sampling timeout fault	×
E. 016	Radian command update timeout fault	×
E. 017	Parameter storage failure	×
E. 018	Parameter out of range fault	×
E. 019	Product matching fault	×
E. 210	Hardware overcurrent fault	×
E. 211	Output ground short circuit fault	×
E. 212	UVW phase sequence fault	×
E. 213	Flying car breakdown	×
E. 214	Control power supply under voltage fault	×
E. 215	AI sampling fault	√
E. 216	STO hitch	
E. 217	Input out-of-phase fault (WU)	
E. 218	Servo emergency stop fault	
E. 219	Drive temperature fault	
E. 227	Output phase loss fault	
E. 228	Precharge abnormal fault	
E. 411	DI function allocation fault	
E. 412	DO function allocation fault	
E. 413	Current calculation overflow fault	
E. 414	DC bus undervoltage fault	
E. 415	DC bus overvoltage fault	
E. 416	Speeding excess	
E. 417	High startup speed fault	
E. 418	Servo repeat enable fault	
E. 419	Driver overload fault	
E. 420	Fault of excessively high frequency of frequency division output	
E. 421	The electronic gear ratio is set incorrectly	
E. 423	Excessive position deviation fault	
E. 424	Position command overspeed fault	
E. 429	Longmen synchronization deviation is too large	√

E. 430	Longmen compensation data overflow	√
E. 710	Speeding excess	√
E. 711	Inertial identification fault	√
E. 712	Magnetic pole identification fault	√
E. 715	Motor parameter identification failed	√
E. 716	Gain auto-adjustment fault	√
E. 910	Encoder parameter fault	×
E. 911	Encoder communication failure	×
E. 912	Encoder parameter verification error fault	×
E. 913	Three-phase Hall logic error fault of encoder	×
E. 914	Encoder wire fault	×
E. 916	Encoder wire fault	√
E. 917	Encoder battery failure	
E. 918	Multiple encoder count errors	
E. 919	Encoder multi-loop counter overflow fault	
E. 922	Encoder overheating warning	
E. B10	Motor overload fault	
E. B11	Motor blockage fault	
E. B13	Motor vibration fault	
E. B14	Running exception detection	√
E. B15	Motor PTC failure	√
E. D15	The upper and lower limits of the soft limit are set incorrectly	√
E. D16	The origin offset exceeds the soft limit range	√

pay attention to：

"√" indicates that the fault is allowed to reset. The reset method is detailed in Section 6.6. It should be noted that the fault can be successfully reset only when the fault source has been removed.

"×" indicates that the fault does not allow reset and must be re-powered on and off.

6.3 List of Warning Codes

All warnings can be automatically reset after the warning condition is removed. Alternatively, reset by pressing any key on the control panel.

Table 6-2 List of Warning Codes

Warning display	Warning name
A. 220	Positive overrun warning
A. 221	Negative overshoot warning
A. 222	Input out of phase warning
A. 223	AI zero bias warning
A. 224	Resistor overload warning
A. 226	External regenerative resistor warning of low resistance
A. 227	Output phase loss warning
A. 425	Zero return failure warning
A. 426	Need to re-power up and down warning
A. 427	Parameter storage exception warning
A. 428	Error warning of incorrect frequency division output setting
A. 920	Encoder exception warning
A. 921	Encoder battery voltage low warning
A. 922	Encoder overheating warning

6.4 Fault Treatment

Table 6-3 List of Troubleshooting

The fault code and its description	failure cause	treatment measure
E. 010. 0 The manufacturer's parameters are not checked properly	1. The software was updated. 2. The parameters are stored with a momentary power failure. 3. The number of parameter writes exceeded the maximum within a certain period of time. 4. Servo driver failure.	1. Restore factory parameters (P0501=1). 2. Power on again. After system parameters are restored and initialized (P0501=1), parameters are re-written. 3. Change the parameter writing method. 4. Replace the servo driver.
E. 011. 0 Internal communication initialization exception in software	1. The FPGA and MCU software versions do not match. 2. FPGA hitch 。	1. Consult our technical support to update the matching FPGA or MCU software. 2. Contact the manufacturer for technical support.
E. 012. 0 The software version does not match the product model	1. The FPGA version is too low. 2. FPGA hitch 。	1. Update the matching FPGA or MCU software. 2. Contact the manufacturer for technical support.
E. 013. 0 FPGA interrupt signal lost	1. FPGA hitch 。 2. The communication handshake between FPGA and MCU is abnormal. 3. The driver internal operation timed out.	1. Replace the servo driver. 2. Contact the manufacturer for technical support.
E. 014. 0 Communication timeout between MCU and FPGA	1. MCU communication timeout. 2. The encoder communication timed out.	1. Use the standard motor cable and encoder cable provided by our company. 2. Check cable connections for damage. 3. Strong and weak power cables are separated.
E. 015. 0 Current chip sampling timeout	1. Check whether the power line output is broken or contact is poor. 2. Current sampling timeout.	1. Use the standard motor cable and encoder cable provided by our company. 2. Check cable connections for damage. 3. Strong and weak power cables are separated.
E. 016. 0 Update timeout for torque command	1. Servo driver failure.	1. Replace the servo driver. 2. Contact the manufacturer for technical support.
E. 017. 0 Parameter storage write exception	1. EEPROM data error fault.	1. Restore system parameters and initialize (P0501=1), then power on again. 2. Replace the servo driver.
E. 018. 0 The manufacturer's parameters are out of range	1. The software has been updated and the current value of the function code exceeds the allowable range. 2. EEPROM failure. 3. Servo driver failure.	1. Power on again. After system parameters are restored and initialized (P0501=1), parameters are re-written. 2. Replace the servo driver.
E. 019. 0 Encoder matching fault	1. Product number (motor or driver) does not exist.	1. Refer to "Servo System Supporting Specifications" and replace the mismatched product.

	2. The motor and driver power levels do not match.	
E.210.0 P, N phase overcurrent	1.The braking resistor is too small or short circuit. 2. Poor contact or short circuit of motor cable. 3. The motor cable is not properly grounded. 4. Motor burned out. 5. The gain parameter is set improperly, and the motor oscillates. 6.Encoder wiring problem.	1. Refer to the specification, select the appropriate braking resistor and set the relevant parameters reasonably. 2. Check whether the motor cable is correctly connected, whether there is short circuit, poor connection, no grounding and other conditions. 3.Check for damage to encoder cable. 4.Re-adjust the gain. 5.Change the motor.
E. 211. 0 Output ground short circuit causes bus voltage overvoltage	1. The drive power cable (UVW) is short-circuited to ground. 2. Motor short circuit to ground. 3.Servo driver failure. 4. The bus voltage discharge point (P0219) is set too low.	1.Redress the wiring or replace the power cable of the driver. 2.Change the motor. 3.Correct the bus voltage discharge point (P0219).
E. 212. 0 UVW phase sequence error	1. When the driver performs angular recognition, the UVW phase sequence of the driver and motor does not match.	1. Connect the UVW cable in the correct phase sequence.
E.213.0 Fishtail malfunction	1.The UVW phase sequence wiring is wrong. 2. The initial phase of the motor rotor is wrong due to interference from the upper power supply. 3. Error in encoder model or wiring. 4. Under vertical axis condition, the gravitational load is too large.	1.Connect the UVW cable in the correct phase sequence. 2.Power on and off again, and relearn the Angle. 3. Replace the matching drive and motor, and set the motor model correctly. 4.Check whether the encoder and motor cable are correctly connected. 5. Reduce the vertical axis load, or improve rigidity, or shield the fault without compromising safety and use.
E. 214. 0 Control the power supply under voltage	1.Control the voltage of the power supply is unstable or power failure. 2.Control poor contact of cables.	1.Check the wiring or replace the cable. 2.If the power is switched on again, ensure that the power supply is stable if there is an abnormal power failure. 3.Increase power capacity.
E. 215. 0 AI sampling voltage is too high		
E. 216. 0 The STO terminal is not connected	1.The STO is not connected and the STO takes effect.	1.STO is properly wired. 2.Replace the servo driver.

E. 217. 0 Three-phase input is missing one phase	1. Three-phase power specification The driver is connected to a single-phase input. 2.Three-phase input wiring is faulty. 3. Three-phase voltage imbalance or three-phase voltage too low.	1.Check the three-phase power supply wiring. 2. Three-phase specification driver and allow single-phase operation (below 1Kw), disable alarm (set P0800=2).
E. 218. 0 Servo emergency stop fault	1.DI function 2: Emergency shutdown is triggered. 2. The background communication emergency stop was triggered.	1. Check the operation mode and release the DI brake valid signal under the premise of safety (the fault is automatically reset after the emergency stop valid signal is released).
E. 219. 0 Drive temperature fault	1.The ambient temperature is too high. 2.After overload, the overload fault is reset by turning off the power supply and repeated several times. 3.The fan is damaged and cannot work properly. 4. The installation direction of the servo driver and the spacing with other servo drivers are not reasonable.	1.Improve the cooling condition of servo driver and reduce the ambient temperature. 2. Change the fault reset method, wait 30s after overload and then reset. Improve the capacity of the driver and motor, increase the acceleration and deceleration time, and reduce the load. 3.Install according to the installation standards of the servo driver. 4.Replace the servo driver.
E. 227. 0 UVW output is out of phase	1. The power line of phase U, V or W of the motor is broken.	1. Check the motor power cable wiring, rewire, replace the cable if necessary.
E. 228. 0 The precharge relay is not engaged	1.Hardware damage.	1.Replace the servo driver. 2. Contact the manufacturer for technical support.
E. 228. 0 Pre-charging circuit	1.Pre-charging circuit	1. Contact the manufacturer for technical support.
E. 411. 0 Repeated distribution of DI functions	1. When the DI function is assigned, the same function is repeatedly assigned to multiple DI terminals.	1.Redistribute DI functions to avoid duplication.
E. 412. 0 The DO function is assigned beyond the defined scope	1DO The number of functions exceeds the number of DO functions.	1.Restore factory parameters and power on/off again.
E. 413. 0 Current calculation overflow fault	1.DQ axis current overflow.	1.Restore factory parameters and power on/off again. 2.Replace the servo driver.
E. 414. 0 DC bus undervoltage fault	1.The main circuit power supply is unstable or out of power. 2.There was a momentary power cut. 3.The power supply voltage drops during operation. 4. Three-phase power specification The driver is connected to a single-phase input.	1.Refer to the input power supply specifications and adjust or replace the power supply. 2.Increase power capacity. 3.Shielding phase loss fault detection.

E. 415. 0 DC bus overvoltage fault	1. The input voltage of the main circuit is too high. 2. The power supply is unstable or has been affected by lightning. 3. Brake resistor fails. 4. The value of the external braking resistor is too large, and the maximum braking energy cannot be completely absorbed. 5. The bus voltage sampling value has a large deviation. 6. The motor is in the state of rapid acceleration and deceleration, and the maximum braking energy exceeds the absorbable value.	1. Refer to the input power supply specifications and adjust or replace the power supply. 2. Connect surge suppressor. 3. Select the appropriate external braking resistor according to its specifications. 4. Increase the acceleration and deceleration time as much as possible.
E. 416. 0 Speed exceeds maximum rotational speed	1. The phase sequence of the motor cable is UVW wrong. 2. Motor or encoder parameters are not set correctly, such as pole logarithm, encoder resolution, etc. 3. The motor does not perform angle identification. 4. The input command exceeds the overspeed fault threshold. 5. Motor speed closed loop overshoot.	1. Connect U, V and W phases in the correct order. 2. Correct motor parameters or encoder resolution. 3. Increase power capacity. 4. Re-adjust the gain. 5. Reduce the electronic gear ratio under the premise of meeting the demand. 6. Set the speed limit threshold within the overspeed threshold.
E. 417. 0 The starting speed is greater than the rated speed	1. When the driver is enabled, the actual speed of the motor is greater than the rated speed.	1. The fault is reset, the actual speed of the motor is reduced, and it runs again.
E. 418. 0 Enable servo repeat	1. When the internal enable is enabled, the communication servo enable works effectively.	1. Turn off the servo enable signal of the host computer.
E. 419. 0 Driver overload fault	1. Parameter settings are incorrect. 2. The driver load rate is too high, the load inertia is too large or the machine is stuck. 3. motor stalling 。	1. Set the correct P0102 according to the driver model. 2. Adjust the parameters according to the effect of current feedback. 3. Replace the driver with a higher power one. 4. Adjust the mechanism to relieve the jamming phenomenon. 5. Refer to E.B11.0 troubleshooting methods.
E. 420. 0 Fault of excessively high frequency of frequency division output	1. The output pulse frequency exceeds the hardware's allowable frequency limit (single channel 4MHz).	1. Reduce the number of pulses output by the codec frequency divider (P1316). 2. Use twisted pair shielded wire to prevent interference pulses from superimposing on real pulses, resulting in false alarm faults.

E. 421. 0 The local gear ratio is set incorrectly	1. The electronic gear ratio exceeds the above range. 2.Order of parameter changes.	1.Set the gear ratio according to the reference gear ratio range. 2.Use the fault reset function or power on again.
E. 422. 0 When the full closed loop uses the multi-segment absolute position mode, the inner and outer rings cannot be switched	1. In the full closed-loop position mode, the source of the position instruction is internal position instruction, but the inner and outer ring switching mode is used.	1. When using the full closed-loop function and the position instruction source is an internal position instruction, only the external encoder feedback mode can be used, that is, P2200 can only be 1.
E. 423. 0 The inner ring position deviation is too large	1. The driver UVW output is missing a phase or the phase sequence is wrong. 2. The driver UVW output is disconnected or the encoder is disconnected. 3. The motor is blocked due to mechanical factors. 4.Servo driver gain is low. 5.Position command increment is too large. 6. The deviation threshold 6065h/P0806 is too small. 7.Servo driver/motor failure.	1.Redress the wiring or replace the cable according to the correct wiring. 2.Redress the wiring and replace the cable if necessary to ensure a reliable connection. 3.Check for mechanical factors. 4.Perform manual gain adjustment or automatic gain adjustment. 5.Increase the acceleration and deceleration slope of the position command. 6.Increase the deviation threshold 6065h/P0806. 7.Replace the servo driver or motor.
E. 424. 0 Position command is repeatedly doubled in speed	1.Position command increment is too large. 2. The target position (607A target position) is not aligned with the current position before the mode switch or when the servo is enabled. 3. The simultaneous loss leads to excessive accumulation of position instructions. 4. Motor speed limit error.	1.Reduce the incremental target position command. 2. Before mode switching or when the servo is enabled, the value of the current position is assigned to the target position (607A target position). 3.Confirm whether the maximum speed of the motor meets the application requirements.

E. 429. 0 The deviation generated during the synchronization of Longmen is too large	1. During the synchronous operation of Longmen, the operating deviation of the two motors is too large.	1.Exclude physical card freeze and ensure normal operation of dragon gate. 2. Modification (P0401 motor running direction) ensures that the running direction of gantry motor is the same as the instruction direction. 3. Modification (P2202 external encoder direction selection) ensures that the changing direction of the two gantry internal and external encoders is the same as the running direction. 4. Adjust the values of the second driver (P2205 outer ring electronic gear ratio numerator) and (P2206 outer ring electronic gear ratio denominator). 5. Adjust appropriately (P2234 synchronous position gain) and (P2235 synchronous position differential).
E. 430. 0 Longmen compensation data write overflow	continue to have	continue to have
E. 710. 0 FPGA internal test speed overflow	1. The internal speed calculation of FPGA overflows.	1.Check and confirm that the encoder cable is connected correctly. 2.Power on and off again and try to run it again. 3.Replace the motor or driver.
E. 711. 0 Offline inertial identification fault	1.Offline inertia identification is incomplete.	1. Contact the manufacturer for technical support.
E. 712. 0 Magnetic pole identification fault	1. The initial magnetic pole Angle identification of the motor fails.	1. Disconnect the motor shaft and re-identify the Angle.
E. 715. 0 The parameter identification result is abnormal	1. The identification result is 0	1. Contact the manufacturer for technical support.
E. 716. 0 The adjusted gain is too small	1. The adjusted gain is too small	1. Re-adjustment; 2. Contact the manufacturer for technical support.
E. 910. 0 The encoder parameter check is abnormal when power is on	1.The driver and motor types do not match. 2. The parameters in the bus type incremental encoder ROM are checked incorrectly or not stored.	1.Replace the matching drive and motor. 2. Check the encoder cable. Please use our standard encoder cable. 3.The encoder wire and power wire are separated.

E. 911. 0 (To be defined in detail)	1. Coding connector wiring error. 2. Encoder cable loose. 3. The encoder Z signal is disturbed (EMC related problem). 4. Encoder fault.	1. Connect the wiring according to the correct wiring diagram. 2. Redress the wiring and ensure that the encoder terminal is securely connected. 3. Use the encoder cable standard with our company. 4. Replace the servo motor.
E. 912. 0 Error in encoder parameter check	1. The cable of the bus-type incremental encoder is broken or loose. 2. The parameter read/write of the bus-type incremental encoder is abnormal.	1. Confirm whether the encoder cable is incorrectly connected, or broken wire, poor contact and other conditions. 2. Encoder cable and power cable are separated. 3. Replace the servo motor.
E. 913. 0 The initial angle is read incorrectly during initialization of the upper power supply	1. The driver and motor types do not match. 2. Encoder cable is broken.	1. Replace with a matching motor and driver. 2. Replace the encoder cable and tighten the connection.
E. 914. 0 Z signal line broken	1. The Z signal is lost due to the encoder fault. 2. The Z signal of the encoder is lost due to a faulty or incorrect connection.	1. Replace the servo motor. 2. Check whether the encoder wire is in good contact, and rewire or replace the cable.
E. 917. 0 Encoder battery failure	1. Absolute value encoder, no battery is connected during power failure. 2. Encoder battery voltage is too low.	1. Reconnect the battery or replace it with a new one. 2. Set P2005=1 to clear the fault.
E. 918. 0 Multiple encoder count errors	1. Encoder fault.	1. Set P2005=2 to clear the fault and power on again. 2. Change the motor.
E. 919. 0 Encoder multi-loop counter overflow	1. The absolute value encoder will only report a fault when the multi-turn count overflow occurs, and the multi-turn data is 32767 or 32768. This fault is detected by the servo driver, not the encoder.	1. Set P2005=2 to clear the multi-turn data of the encoder and re-power on.
E. 922. 0 Encoder overheating warning	1. The encoder is overheating.	1. The driver is stopped for a period of time. 2. Ensure that the encoder is well ventilated to reduce the ambient temperature.

E. B10. 0 Motor overload fault	1. Motor wiring, encoder wiring error, bad. 2. The load is too heavy, the motor output effective torque exceeds the rated torque, and it runs continuously for a long time. 3. The acceleration is too frequent or the load inertia is too large. 4. The gain adjustment is not appropriate or too rigid. 5. The driver or motor model is set incorrectly. 6. Due to mechanical factors, the motor is blocked, resulting in excessive load during operation.	1. Correct the driver model and motor model to set the parameters. 2. Use the standard cable of our company and check the cable connection according to the wiring diagram. 3. Replace the high capacity drive and the matching motor, or reduce the load, increase the acceleration and deceleration time. 4. Increase the acceleration and deceleration time in a single run. 5. Redefine the gain. 6. Rule out mechanical factors.
E. B11. 0 Motor block protection	1. The driver UVW output is missing phase, broken wire, and the phase sequence is wrong. 2. Motor parameters are not set correctly, such as the logarithm of poles. 3. The motor is not Angle recognized. 4. Communication instructions are disturbed. 5. The motor is blocked due to mechanical factors.	1. Redress the wiring or replace the cable according to the correct wiring. 2. Correct motor parameters. 3. Check whether the communication line between the host computer and the servo is disturbed. 4. Check whether there is mechanical jam, occasional jerk, or eccentricity.
E. B13. 0 Motor vibration is too large	1. Motor vibration is too large	1. Adjust the gain parameters 2. Turn on vibration suppression
E. B14. 0 Location anomaly detection		
E. B15. 0 Thermistor broken wire or thermistor not connected	1. Thermistor broken wire or thermistor not connected	1. Check the thermistor and its connecting wires.
E. D15. 0 The upper and lower limits of the soft limit are set incorrectly	1. The lower limit value of the software limit is greater than or equal to the upper limit value of the soft limit.	1. Reconfigure the parameters to ensure that 607D-01h is less than 607D-02h (POB45 is less than POB47).
E. D16. 0 The origin offset exceeds the soft limit range	1. The origin is biased outside the soft limit position range.	1. Reconfigure the parameters and properly set 607 D-01h and 607D-02h (POB45 and POB47).

6.5 Warning Handling

Table 6-4 Summary of Warning Processing

Warning name	Causes of the warning	treatment measure
A. 220. 0 Positive overrun warning	1.DI function 9, the positive limit input is valid and the forward drive is prohibited.	1. Check the operation mode, and give the motor reverse command or reverse rotation the motor under the premise of safety to make the forward limit invalid.
A. 221. 0 Negative overshoot warning	1.DI function 10, the reverse limit input is valid and the reverse drive is prohibited.	1. Check the operation mode, and give the motor forward command or rotate the motor forward under the premise of safety to make the reverse limit invalid.
A. 222. 0 Input out of phase warning	1.Three-phase power supply input is missing.	1.Check the three-phase power supply wiring. 2. Three-phase specification driver and allow single-phase operation (below 1kW), disable alarm (set P0800=2).
A. 223. 0 AI zero bias warning	continue to have	continue to have
A. 224. 0 Resistor overload warning	1.External regenerative resistor wiring problem. 2. When the built-in resistance is used, the power terminal P and D are not connected. 3. The type selection, resistance value, power and other related parameters of the regenerator are set incorrectly. 4.The input voltage of the main circuit exceeds the specification range. 5.The load moment of inertia ratio is too large. 6. The motor is in the state of deceleration for a long time. 7.The capacity of the servo driver or regenerative resistor is insufficient.	1.Check that the wiring of the external regenerative resistor is normal. 2.When using the built-in resistance, correctly connect the P and D terminals. 3.Correctly set the parameters related to the regenerative resistance. 4.Select the appropriate regenerative resistor according to specifications. 5.Refer to the specifications and use the power input within the specifications. 6. Reduce the load, or increase the acceleration and deceleration time, or increase the operating cycle.
A. 226. 0 External regenerative resistor warning of low resistance	1. When using an external regenerative resistor, the value of the external regenerative resistor is less than the minimum allowable value of the specification.	1. Referring to the specification, select an appropriate regenerative resistor and connect it correctly between P and C. 2.Correct the parameters of the external regenerative resistor.
A. 227. 0 Output phase loss warning	1. Motor power line broken.	1. Check the motor power cable wiring, rewire, replace the cable if necessary.
A. 425. 0 Zero return failure warning	1.Origin switch fault. 2. The time limit to find the origin is too short. 3.The speed of the high-speed search origin switch signal is too small. 4.Switching is not properly set up.	1.If you are using hardware DI, confirm that P03 group has set DI function 11, and then check whether the DI terminal wiring is normal; check whether the origin return operation is wrong, and correctly operate this function. If you are using virtual DI, check whether the VDI is used correctly. 2.Increase the origin lookup time P13.49. 3.Increase the origin high-speed search speed P13.46. 4.Reasonable hardware switch position.
A. 426. 0	1. After changing the parameters, you need to power on and off again before the parameters can be generated	1.Power on/off again.

Warning name	Causes of the warning	treatment measure
Need to re-power up and down warning	effect 。	
A. 427. 0 Parameter storage exception warning	1. Data is written to the EEPROM very often and in large quantities.	1. Reduce the unnecessary parameters written to EEPROM. 2. Set P05.10 to 0 and do not store parameters to EEPROM.
A. 428. 0 Error warning of incorrect frequency division output setting	1. When the encoder frequency division output function (P13.15=0) is used, the encoder frequency division pulse number (P13.16) is not set within the range.	1. Reconfigure the encoder frequency division pulse number (P13.16) to meet the specified range.
A. 713. 2 Sampling error warning	1. Contact the manufacturer for technical support.	1. The parameter identification can be repeated many times. 2. Contact the manufacturer for technical support.
A. 713. 3 Check for incorrect rise time error warning	1. Contact the manufacturer for technical support.	1. The parameter identification can be repeated many times. 2. Contact the manufacturer for technical support.
A. 713. 4 Check for out-of-tune error warning	1. Contact the manufacturer for technical support.	1. The parameter identification can be repeated many times. 2. Contact the manufacturer for technical support.
A. 713. 5 Q-axis current steady-state error test warning	1. Contact the manufacturer for technical support.	1. The parameter identification can be repeated many times. 2. Contact the manufacturer for technical support.
A. 713. 6 D-axis current steady-state error test warning	1. Contact the manufacturer for technical support.	1. The parameter identification can be repeated many times. 2. Contact the manufacturer for technical support.
A. 920. 0 Error warning for algorithm error in encoder	1. The encoder zero point search algorithm failed. 2. The encoder is divided frequency counting algorithm error.	1. The servo driver reboots power on and off. 2. Replace the servo motor.
A. 921. 0 Encoder battery voltage low warning	1. Measure the battery voltage.	1. Replace the battery with a new voltage-matched one.
A. 922. 0 Encoder overheating warning	1. The encoder is overheating.	1. The driver is stopped for a period of time. 2. Ensure that the encoder is well ventilated to reduce the ambient temperature.
A. D35. 0 Return to zero mode P13.45 parameter setting error	1. When the zero return mode is used, 15/16/31/32 and other non-existent zero return modes are input at P13.45.	1. Set P13.45 correctly.
nrd Servo not ready	1. The control circuit voltage is too low; 2. The voltage of the power circuit bus is too low; 3. Encoder feedback exception;	1. Refer to the specification and confirm that the driver is 220VAC/normal power supply. 2. Remove the motor anti-pull structure, or replace the motor encoder.

6.6 Redeployment Method

There are two ways to reset the faults and warnings of HR 3 series servo:

Set parameter P20.03=1 to reset;

Reset through DI input (function 5, fault reset);

For fault reset, the servo enable must first be turned off before issuing a fault reset signal. For warning reset, the fault reset signal can be issued directly. Successful fault reset is only possible when the fault condition has been cleared. Warning conditions will automatically reset after the warning condition is cleared.

Chapter 7 Parameter Description

7.1 Overview of Function Code Allocation

Table 7-1 Function Code Distribution List

parameter	name	attribute	unit	Scope of the setting	Factory value	setting way	come into force way
0 Motor parameters							
P0003	Motor properties	RW		0~65535	0	halt change	immediately come into force
P0010	Rated voltage of motor	RW	V	0-220V	0	halt change	again power on
P0011	Rated current of motor	RW	0.01A	0~65535	470	halt change	again power on
P0012	Rated power of motor	RW	0.01kW	0~65535	75	halt change	again power on
P0013	nominal torque	RW	0.01Nm	0~4294967295	239	halt change	again power on
P0017	rated speed	RW	rpm	0~65535	3000	halt change	again power on
01 Encoder parameters							
P0100	Encoder communication protocol	RW	–	0~65535	11233	halt change	again power on
P0103	Encoder version number	RO		0~65535	0	show	immediately come into force
P0105	Encoder line count	RW		0~4294967295	1048576	halt change	again power on
02 Driver parameters							
P0200	MCU software version number	RO		0~65535	0	show	immediately come into force
P0201	FPGA software version number	RO		0~65535	0	show	immediately come into force
P0202	MCU non-identification	RO		0~4294967295	0	show	immediately come into force
P0204	FPGA non-identification	RO		0~4294967295	0	show	immediately come into force
P0212	Drive input voltage	RO		0~65535	220	show	immediately come into force

parameter	name	attribute	unit	Scope of the setting	Factory value	setting way	come into force way
P0213	Rated power of drive	RO	0.01kW	1~65535	75	show	immediately come into force
P0215	Rated current of driver	RO	0.01A	1~65535	550	show	immediately come into force
P0234	Resistor selection	RW	–	0-Built-in braking 1-External brake natural cooling 2-External braking forced air cooling 3-no regenerative resistance	0	Shutdown changes	with immediate effect
P0235	Refractive index of regenerator	RW		10~100	30	halt change	immediately come into force
P0236	Built-in regenerative resistance power	RO	W	1~65535	40	show	immediately come into force
P0237	Built-in resistance value of the regenerator	RO	Ω	1~1000	50	show	immediately come into force
P0238	Minimum value of external resistance	RO	Ω	1~1000	40	show	immediately come into force
P0239	External regenerative resistor power	RW	W	1~65535	40	halt change	immediately come into force
P0240	External resistance value	RW	Ω	1~1000	50	halt change	immediately come into force
03 IO parameter							
P0300	DI1 function	RW		0-undefined 1-Servo enable 2-Emergency shutdown 3. Injunction 4-Position deviation clearance 5-Fault reset 6-Zero speed holding 7-Positive nodding 8-Reverse point motion 9-Positive limit 10-Reverse limit 11-Origin switch 12-Reset enable 13-Speed limit selection 14-Positive torque limit selection 15-Reverse torque limit selection 16-Preset position enabled 19-Torque command direction switch	9	Shutdown changes	with immediate effect

parameter	name	attribute	unit	Scope of the setting	Factory value	setting way	come into force way
				20-Speed command direction change			
				21-Position command direction switch			
				22-Gain Switching Options			
				23-Switching between instructions			
				24-Mode Switching 1			
				25-Mode Switching 2			
				26-Electronic gear switching			
				27-Preset instruction selection 1			
				28-Preset instruction selection 2			
				29-Preset instruction selection 3			
				30-Preset instruction selection 4			
				31-Take the current DI trigger point as the origin			
P0301	DI1 polarity	RW		0-normally on 1-normally closed	0	halt change	immediately come into force
P0302	DI2 functionality	RW	-	Refer to DI1 function	10	halt change	immediately come into force
P0303	DI2 polarity	RW		0-normally on 1-normally closed	0	halt change	immediately come into force
P0304	DI3 functionality	RW	-	Refer to DI1 function	11	halt change	immediately come into force
P0305	DI3 polarity	RW		0-normally on 1-normally closed	0	halt change	immediately come into force
P0306	DI4 functionality	RW		Refer to DI1 function	1	halt change	immediately come into force
P0307	DI4 polarity	RW		0-normally open 1-normally closed	0	halt change	immediately come into force
P0308	DI5 functionality	RW		Refer to DI1 function	5	halt change	immediately come into force
P0309	DI5 polarity	RW		0-normally on 1-normally closed	0	halt change	immediately come into force
P0310	DI6 function	RW		Refer to DI1 function	4	halt change	immediately come into force
P0311	DI6 polarity	RW		0-normally open 1-normally closed	0	halt change	immediately come into force
P0312	DI7 function	RW	-	Refer to DI1 function	6	halt change	immediately come into force
P0313	DI7 polarity	RW		0-normally on 1-normally closed	0	halt change	immediately come into force

parameter	name	attribute	unit	Scope of the setting	Factory value	setting way	come into force way
P0314	DI8 functionality	RW	-	Refer to DI1 function	0	halt change	immediately come into force
P0315	DI8 polarity	RW		0-normally on 1-normally closed	0	halt change	immediately come into force
P0318	Initial implementation of the DI function 1	RW		0-undefined 1-Servo enable 2-Emergency shutdown 3. Injunction 4-Position deviation clearance 5-Fault reset 6-Zero lock 7-Positive nodding 8-Reverse point motion 9-Positive limit 10-Reverse limit 11-Origin switch 12-Reset enable 13-Speed limit selection 14-Positive torque limit selection 15-Reverse torque limit selection 16-Preset Position Enable	0	Shutdown changes	Re-energizing
P0319	Initial implementation of the DI function 2	RW		0-undefined 19-Torque command direction switch 20-Speed command direction change 21-Position command direction switch 22-Gain Switching Options 23-Switching of speed command sources 24-Mode Switch 1 25-Mode Switching 2 26-Electronic gear switching 27-Preset instruction selection 1 28-Preset instruction selection 2 29-Preset instruction selection 3 30-Preset instruction selection 4 31-Take the current DI trigger point as the origin	0	Shutdown changes	Re-energizing
P0320	DO1 function	RW	-	0-undefined 1-Servo ready (rdy) 2-Servo operation (Run) 3-Servo warning output (Warn)	17	Shutdown changes	with immediate effect

parameter	name	attribute	unit	Scope of the setting	Factory value	setting way	come into force way
				4-Servo fault output (PRror)			
				5-Motor movement (TGon)			
				6-Zero Speed Signal (ZPRo)			
				7-speed consistency (VCmp)			
				8-speed arrival (VArr)			
				9-Torque arrival (TArr)			
				10-Positioning close (Near)			
				11-Position arrival (Coin)			
				12-Torque limit (Clt)			
				13-Speed limit (VIt)			
				14-return to zero (HomeOK)			
				15-Electric return to zero completed (eHomeOK)			
				17-Brake Control (BK)			
				18-Dynamic Braking (DB)			
				19-Magnetic pole identification completed (AngRdy)			
P0321	DO1 polarity	RW	-	0-normally on 1-normally closed	0	halt change	immediately come into force
P0322	DO2 function	RW		Refer to DO1 function	2	halt change	immediately come into force
P0323	DO2 polarity	RW	-	0-normally on 1-normally closed	0	halt change	immediately come into force
P0324	DO3 functionality	RW		Refer to DO1 function	4	halt change	immediately come into force
P0325	DO3 polarity	RW		0-normally on 1-normally closed	0	halt change	immediately come into force
P0326	DO4 functions	RW		Refer to DO1 function	11	halt change	immediately come into force
P0327	DO4 polarity	RW		0-normally open 1-normally closed	0	halt change	immediately come into force
P0328	DO5 functions	RW		Refer to DO1 function	14	halt change	immediately come into force
P0329	D05 polarity	RW	-	0-normally open 1-normally closed	0	halt change	immediately come into force
P0330	DIDO mandatory output	RW		0-no operation 1-Mandatory DI enabled 2-Enable DO by force 3-Enabling the mandatory DIDO	0	Any changes	with immediate effect
P0331	DI mandatory output value	RW		0~511	511	wantonly change	immediately come into force

parameter	name	attribute	unit	Scope of the setting	Factory value	setting way	come into force way
P0332	DO mandatory channel selection	RW		0~31	0	wantonly change	immediately come into force
P0334	Communication forced DO output enable switch	RW		0~7	0	halt change	immediately come into force
P0344	AI1 input filter time	RW	0.01ms	0~65535	200	wantonly change	immediately come into force
P0345	AI1 input median filter enabled	RW	-	0~1	1	wantonly change	immediately come into force
P0348	AI2 input filter time	RW	0.01ms	0~65535	200	wantonly change	immediately come into force
P0349	AI2 input median filter enabled	RW		0~1	1	wantonly change	immediately come into force
P0362	The simulated 10V corresponds to the speed	RW	rpm	0~6000	3000	halt change	immediately come into force
P0363	Simulated 10V corresponds to torque	RW	times	0~800	100	halt change	immediately come into force
04 Motion control parameters							
P0400	control model	RW		0-Speed mode 1-Position mode 2-Torque mode 3-Torque mode-> speed mode 4-Speed mode-> Position mode 5-Torque mode> Position mode 6-Torque mode> speed mode-> position mixed mode	1	Shutdown changes	with immediate effect
P0401	Motor running direction	RW		0-CCW is the positive direction 1-Take CW as the positive direction	0	halt change	again power on
P0402	Location Feedback System	RW	-	0-incremental mode 1-Absolute linear mode 2-Absolute rotation mode	0	Shutdown changes	Re-energizing
P0410	A type of fault shutdown mode	RW		0-Free shutdown, keep free state 1-DB shutdown, keep free state 2-DB shutdown, keep DB status	2	Shutdown changes	with immediate effect
P0411	Type II fault shutdown mode	RW		0-Free shutdown, keep free state 1-Zero speed stop, keep free state 2-Zero speed shutdown, keep DB state 3-DB shutdown, keep free state 4-DB shutdown, keep DB status	2	Shutdown changes	with immediate effect
P0412	Select the shutdown mode when power is interrupted	RW		0-Free downtime	2		

parameter	name	attribute	unit	Scope of the setting	Factory value	setting way	come into force way
				1-DB shutdown 2-Zero speed shutdown		halt change	immediately come into force
P0413	Select the shutdown state of the power supply	RW		0-Keep free 1-Keep the DB in shape	1	halt change	immediately come into force
P0414	Off power shutdown mode selection	RW		0-Enable according to the mode 1-Forced zero speed mode	0	halt change	immediately come into force
P0415	Overrun shutdown mode	RW		0-Free shutdown, keep free running state 1-Zero speed stop, position locked 2-Zero speed stop, keep free running state	1	Shutdown changes	with immediate effect
P0423	Instantaneous torque stop torque value	RW	0.1%	0~3000	1000	halt change	immediately come into force
05 Function setting parameters							
P0500	Manufacturer password	RW		0~65535	0	wantonly change	immediately come into force
P0501	System parameter initialization	RW		0-no operation 1-Parameter initialization	0	halt change	immediately come into force
P0510	Communication write parameter save	RW		0-Not saved 1-Preservation	1	wantonly change	immediately come into force
P0511	Loss of power parameter preservation	RW		0-Not saved 1-Preservation	0	wantonly change	immediately come into force
P0512	Brake enable switch	RW		0-disabled 1-Enable	1	halt change	immediately come into force
P0513	Release the brake to receive command delay	RW	ms	0~500	250	wantonly change	immediately come into force
P0514	Brake suction zero speed holding time	RW	ms	1~1000	150	wantonly change	immediately come into force
P0515	Clamp suction speed threshold	RW	rpm	0~3000	30	wantonly change	immediately come into force
P0516	Brake suction time threshold	RW	ms	1~1000	500	wantonly change	immediately come into force
P0519	Precharge detection enabled	RW		0-disabled 1-Enable	1	halt change	immediately come into force
P0523	Frequency division output phase	RW	–	0A ahead of B 1A滞后B	0	halt change	again power on
P0543	Soft limit setting	RW	–	0-no restrictions 1. Restrictions	0	halt change	immediately come into force

parameter	name	attribute	unit	Scope of the setting	Factory value	setting way	come into force way
				2. Post-0 restrictions			
06 Gain parameters							
P0600	Speed ratio gain 1	RW	0.1Hz	1~20000	250	wantonly change	immediately come into force
P0601	Speed integral gain 1	RW	0.01ms	15~51200	3183	wantonly change	immediately come into force
P0602	Position proportional gain 1	RW	0.1Hz	0~20000	400	wantonly change	immediately come into force
P0608	Speed feedforward proportional gain	RW	0.1%	0~1000	0	wantonly change	immediately come into force
P0609	Torque moment feedforward proportional gain	RW	0.1%	0~2000	0	wantonly change	immediately come into force
P0610	Load inertia ratio	RW	–	0~12000	200	wantonly change	immediately come into force
07 Filter parameters							
P0700	Location FIR filter	RW	0.1ms	0~65535	0	halt change	immediately come into force
P0701	Location instruction mean filter	RW	0.1ms	0~1280	0	halt change	immediately come into force
P0702	Torque filter 1	RW	0.01ms	0~3000	79	wantonly change	immediately come into force
P0706	Speed feedforward filter time	RW	0.01ms	0~6400	50	wantonly change	immediately come into force
P0707	Torque prefeed filter time	RW	0.01ms	0~6400	50	wantonly change	immediately come into force
P0710	Vibration suppression frequency 1	RW	Hz	50~5000	5000	wantonly change	immediately come into force
P0711	Vibration suppression bandwidth 1	RW		0~20	2	wantonly change	immediately come into force
P0712	Vibration suppression attenuation 1	RW		0~99	0	wantonly change	immediately come into force
P0713	Vibration suppression frequency 2	RW	Hz	50~5000	5000	wantonly change	immediately come into force
P0714	Vibration suppression bandwidth 2	RW		0~20	2	wantonly change	immediately come into force
P0715	Vibration suppression attenuation 2	RW		0~99	0	wantonly change	immediately come into force
P0716	Vibration suppression frequency 3	RW	Hz	50~5000	5000	wantonly change	immediately come into force

parameter	name	attribute	unit	Scope of the setting	Factory value	setting way	come into force way
P0717	Vibration suppression bandwidth 3	RW		0~20	2	wantonly change	immediately come into force
P0718	Vibration suppression attenuation 3	RW		0~99	0	wantonly change	immediately come into force
P0719	Vibration suppression frequency 4	RW	Hz	50~5000	5000	wantonly change	immediately come into force
P0720	Vibration suppression bandwidth 4	RW	_	0~20	2	wantonly change	immediately come into force
P0721	Vibration suppression attenuation 4	RW		0~99	0	wantonly change	immediately come into force
P0747	Location notch frequency A	RW	Hz	10~1000	1000	halt change	immediately come into force
P0774	Low speed pulse instruction filter	RW	25ns	0~255	30	halt change	again power on
P0775	High speed pulse instruction filter	RW	25ns	0~255	3	halt change	again power on
P0776	Speed reaches signal filter	RW	ms	0~5000	10	halt change	immediately come into force
08 Protection parameters							
P0800	Input out-of-phase detection	RW	_	0-Detect faults 1-Detect faults and warnings 2-Not detected	0	Any changes	with immediate effect
P0801	Multi-turn overflow fault detection of encoder	RW	_	0-Not detected 1. Detection	1	halt change	immediately come into force
P0803	Overrate judgment threshold	RW	rpm	0~10000	0	wantonly change	immediately come into force
P0808	Location bias removal method	RW		0-Servo is not cleared when RUN 1-Servo OFF or DI signal valid clearance	0	Shutdown changes	with immediate effect
P0809	Flight path protection detection	RW	_	0-Not detected 1. Detection	1	wantonly change	immediately come into force
P0810	Flywheel current judgment threshold	RW	0.1%	1000~4000	2000	wantonly change	immediately come into force
P0811	Flight speed judgment threshold	RW	rpm	1~1000	10	wantonly change	immediately come into force
P0812	Flight speed feedback filter time	RW	0.1ms	1~1000	20	wantonly change	again power on
P0813	Flight vehicle protection detection time	RW	ms	10~1000	30	wantonly change	immediately come into force

parameter	name	attribute	unit	Scope of the setting	Factory value	setting way	come into force way
P0814	Motor overload protection gain	RW	%	50~300	100	halt change	immediately come into force
P0816	Motor overload detection	RW		0-Not detected 1. Detection	1	halt change	immediately come into force
P0817	Blockage detection	RW		0-Not detected 1. Detection	1	wantonly change	immediately come into force
P0818	Block transfer protection time	RW	ms	10~65535	200	wantonly change	immediately come into force
P0821	Driver overtemperature protection point	RW	℃	0~100	0	halt change	again power on
0^{9}_{ers} Display parameters							
P0900	Position command speed	RO	rpm	-32767~32767	0	show	immediately come into force
P0901	Speed Directive	RO	rpm	-32767~32767	0	show	immediately come into force
P0902	Torque command	RO	0.1%	-32767~32767	0	show	immediately come into force
P0903	Location feedback speed	RO	rpm	-32767~32767	0	show	immediately come into force
P0904	Actual rotational speed	RO	rpm	-32767~32767	0	show	immediately come into force
P0906	Actual speed (accuracy 0.1pm)	RO	rpm	-2147483648~2147483647	0	show	immediately come into force
P0910	busbar voltage	RO	0.1V	0~65535	0	show	immediately come into force
P0911	Controlled electrical voltage	RO	0.1V	0~65535	0	show	immediately come into force
P0912	Output line phase current value (U phase)	RO	0.01A	0~65535	0	show	immediately come into force
P0913	Effective value of drive output line voltage	RO	0.1V	0~65535	0	show	immediately come into force
P0914	Average load rate	RO	0.1%	0~8000	0	show	immediately come into force
P0915	Driver temperature	RO	℃	0~65535	0	show	immediately come into force
P0917	Electrical perspective	RO	0.1°	0~65535	0	show	immediately come into force
P0918	DI input level monitoring	RO	-	0~65535	0	show	immediately come into force

parameter	name	attribute	unit	Scope of the setting	Factory value	setting way	come into force way
P0920	DO output level monitoring	RO	-	0~65535	0	show	immediately come into force
P0922	AI1 voltage sampling value	RO	V	-32767~32767	0	show	immediately come into force
P0923	AI2 voltage sampling value	RO	V	-32767~32767	0	show	immediately come into force
P0925	Total running time	RO	0.1s	0~4294967295	0	show	immediately come into force
P0927	Current power on running time	RO	-	0~4294967295	0	show	immediately come into force
P0930	Real-time instruction counter	RO	Directive unit	-2147483648~2147483647	0	show	immediately come into force
P0932	Running instruction counter	RO	Directive unit	-2147483648~2147483647	0	show	immediately come into force
P0934	Location feedback counter	RO	Directive unit	-2147483648~2147483647	0	show	immediately come into force
P0936	Location feedback counter	RO	Encoder unit	-2147483648~2147483647	0	show	immediately come into force
P0938	Positional tracking deviation	RO	Directive unit	-2147483648~2147483647	0	show	immediately come into force
P0940	Positional tracking deviation	RO	Encoder unit	-2147483648~2147483647	0	show	immediately come into force
P0942	Number of turns in encoder	RO	shut in a pen	0~65535	0	show	immediately come into force
P0943	Encoder single coil position	RO	p	0~2147483647	0	show	immediately come into force
P0945	Absolute position of encoder (low 32 bits)	RO	Encoder unit	-2147483648~2147483647	0	show	immediately come into force
P0947	Absolute position of encoder (high 32 bits)	RO	Encoder unit	-2147483648~2147483647	0	show	immediately come into force
P0949	Mechanical absolute position (low 32 bits)	RO	Encoder unit	-2147483648~2147483647	0	show	immediately come into force
P0951	Mechanical absolute position (32 bits high)	RO	Encoder unit	-2147483648~2147483647	0	show	immediately come into force
P0953	Rotate the load per coil position (32-bit low)	RO	Encoder unit	0~4294967295	0	show	immediately come into force
P0955	Rotate the load per coil position (32-bit)	RO	Encoder unit	0~4294967295	0	show	immediately come into force

parameter	name	attribute	unit	Scope of the setting	Factory value	setting way	come into force way
P0957	Rotate the load per coil position	RO	Directive unit	0~4294967295	0	show	immediately come into force
0A communication parameters							
P0A00	From station number	RW		1~247	1	wantonly change	immediately come into force
P0A02	ModBus communication baud rate	RW		0-2400bps 1-4800bps 2-9600bps 3-19200bps 4-38400bps 5-57600bps 6-115200bps	6	Any changes	with immediate effect
P0A03	ModBus communication protocol	RW		0-no check, 2 end bits (8-N-2) 1-Even parity, 1 end bit (8-0-1) 2-parity check, 1 end bit (8-E-1) 3-No check, 1 end bit (8-N-1)	0	Any changes	with immediate effect
13 Position control parameters							
P1300	Source of location instructions	RW	–	0-pulse instruction 1-preset position instructions	0	halt change	immediately come into force
P1301	The number of command pulses per revolution of the motor	RW	1P/REV	0~1048576	0	halt change	again power on
P1303	Electronic tooth ratio molecules	RW		1~1073741824	4	wantonly change	immediately come into force
P1305	Electronic gear ratio denominator	RW		1~1073741824	1	wantonly change	immediately come into force
P1307	Position reaches signal output condition	RW		0-Output when the absolute value of position deviation is less than P13.08 1-The absolute value of position deviation is less than P13.08, and the output is 0 when the filtered position command is 0 2-The absolute value of position deviation is less than P13.08, and the output is when the position command is 0 before filtering 3-The absolute value of position deviation is less than P13.08, and the setting time of P13.10 should remain valid at least, and the output is 0 when the position command is filtered	0	Any changes	with immediate effect

parameter	name	attribute	unit	Scope of the setting	Factory value	setting way	come into force way
P1308	Position the signal window	RW	Encoder unit	1~65535	7	wantonly change	immediately come into force
P1309	Position the close signal window	RW	Encoder unit	1~65535	65535	wantonly change	immediately come into force
P1310	Position arrival signal hold time	RW	ms	0~30000	0	wantonly change	immediately come into force
P1312	Speed feedforward control selection	RW		0-no speed feedforward 1-Internal speed feedforward 2-Use AI1 as a speed feedforward input 3-Use AI2 as a speed feedforward input	1	Shutdown changes	with immediate effect
P1313	Pulse instruction high and low speed selection	RW		0-Low speed 1--high speed	0	halt change	immediately come into force
P1314	Pulse command pattern	RW		0-direction + pulse, positive logic 1-Direction + pulse, negative logic 2-AB orthogonal pulse, 4x frequency 3-CW+CCW	0	Shutdown changes	Re-energizing
P1315	Servo pulse output mode selection	RW	–	0-Encoder frequency division output 1-Pulse command synchronization output 2-Disable split or synchronous output	0	Shutdown changes	Re-energizing
P1316	Number of pulse division in encoder	RW	P/REV	35~1073741824	2500	halt change	again power on
P1318	Location pulse edge selection	RW	–	0-valid on the descending edge 1-Rising edge is valid	0	wantonly change	again power on
P1323	Multiple absolute position offsets L32	RW	Encoder unit	-2147483648~2147483647	0	halt change	immediately come into force
P1325	Multiple absolute position offsets HR32	RW	Encoder unit	-2147483648~2147483647	0	halt change	immediately come into force
P1327	Mechanical gear ratio molecules	RW	–	1~65535	1	halt change	immediately come into force
P1328	Mechanical gear ratio denominator	RW	–	1~65535	1	halt change	immediately come into force
P1329	Upper limit of absolute position of the machine L32	RW	Encoder unit	0~4294967295	0	halt change	immediately come into force
P1331	Upper limit of absolute position of the machine HR32	RW	Encoder unit	0~4294967295	0	halt change	immediately come into force
P1344	Back to Origin enabled	RW	–	0-Disable the origin return function 1-Enable the origin reset function through DI 2-Reset the origin immediately	0	Any changes	with immediate effect

parameter	name	attribute	unit	Scope of the setting	Factory value	setting way	come into force way
P1345	Origin restoration mode	RW		-2~35	1	halt change	immediately come into force
P1346	Original point high-speed search speed	RW	rpm	0~3000	100	wantonly change	immediately come into force
P1347	Low speed search at the origin	RW	rpm	0~1000	10	wantonly change	immediately come into force
P1348	Back to the origin with acceleration and deceleration	RW	rpm/s	0~65535	1000	wantonly change	immediately come into force
P1349	Source point find time	RW	S	0~655.35	500.00	wantonly change	immediately come into force
P1351	Origin mechanical offset	RW	Directive unit	-1073741824~1073741824	0	wantonly change	immediately come into force
P1356	Mechanical limit torque	RW	-	0~3000	1000	wantonly change	immediately come into force
P1359	Electronic gear switching enabled	RW		0-Position command equals 0 switch 1-Real-time switching	0	halt change	immediately come into force
P1360	Positioning filter time	RW	ms	0~30000	0	wantonly change	immediately come into force
P1363	Positive position software limit	RW	Directive unit	-2147483648~2147483647	2147483647	halt change	immediately come into force
P1365	Reverse position software limit	RW	Directive unit	-2147483648~2147483647	-2147483648	halt change	immediately come into force
14 speed control parameters							
P1400	Source selection for speed commands	RW		0-Source A Source B 2-Source A+B 3-Source A/B DI switch 4-Communication given	0	Shutdown changes	with immediate effect
P1401	Source of speed instruction A	RW		0-Keyboard given 1-Preset speed given 2-AI1 Given 3-AI2 given	0	Shutdown changes	with immediate effect
P1402	Source of speed instruction B	RW		0-Keyboard given 1-Preset speed given 2-AI1 Given 3-AI2 given	1	Shutdown changes	with immediate effect
P1403	Maximum rotational speed limit	RW	rpm	0~60000	10000	wantonly change	immediately come into force

parameter	name	attribute	unit	Scope of the setting	Factory value	setting way	come into force way
P1404	Speed forward limit	RW	rpm	0~60000	10000	wantonly change	immediately come into force
P1405	Speed reverse limit	RW	rpm	0~60000	10000	wantonly change	immediately come into force
P1406	Speed DI set point	RW	rpm	0~60000	100	wantonly change	immediately come into force
P1407	Speed instruction keyboard set value	RW	rpm	-9999~30000	200	wantonly change	immediately come into force
P1408	Speed instruction acceleration slope time	RW	ms	0~65535	0	wantonly change	immediately come into force
P1409	Speed instruction deceleration slope time	RW	ms	0~65535	0	wantonly change	immediately come into force
P1410	Zero lock speed threshold	RW	rpm	0~6000	10	wantonly change	immediately come into force
P1411	Torque prefeed selection	RW		0-no torque feedforward 1-Internal torque feedforward	1	wantonly change	immediately come into force
P1412	Motor motion state threshold	RW	rpm	0~1000	20	wantonly change	immediately come into force
P1413	Speed, signal width	RW	rpm	0~100	10	wantonly change	immediately come into force
P1414	Speed reaches signal threshold	RW	rpm	10~6000	1000	wantonly change	immediately come into force
P1415	Zero speed output signal threshold	RW	rpm	1~6000	10	wantonly change	immediately come into force
15 Torque control parameters							
P1500	Source selection of torque command	RW		0-Source A Source B 2-Source A+B 3-Source A/B DI switch 4-Communication given	0	Shutdown changes	with immediate effect
P1501	Source of torque command A	RW	–	0-Keyboard given 1-AI1 given 2-AI2 given	0	Shutdown changes	with immediate effect
P1502	Source B of torque command	RW		0-Keyboard given 1-AI1 Given 2-AI2 given	0	Shutdown changes	with immediate effect
P1503	Source selection of torque limit	RW	–	0-Internal torque limit 1 1-External AI restrictions	0	wantonly change	immediately come into force

parameter	name	attribute	unit	Scope of the setting	Factory value	setting way	come into force way
				2-Switching the internal torque limit value 1 and limit value 2 3-DI switch internal torque limit 1 and external AI limit 4-Internal torque limit value 1 and external AI limit minimum value			
P1504	Torque limits AI choices	RW		1-AI1 restriction 2-AI2 restriction	0	wantonly change	immediately come into force
P1505	Internal torque limit for rotation 1	RW	%	0~3000	3000	wantonly change	immediately come into force
P1506	Reverse internal torque limit value 1	RW	%	0~3000	3000	wantonly change	immediately come into force
P1507	Internal rotation torque limit value 2	RW	%	0~3000	3000	wantonly change	immediately come into force
P1508	Reverse internal torque limit value 2	RW	%	0~3000	3000	wantonly change	immediately come into force
P1509	Source selection of speed limit in torque mode	RW	–	0-Internal speed limit 1-DI Select Speed Limit 2-External AI speed limit	1	Any changes	with immediate effect
P1510	Speed limit AI selection	RW		1-AI1 2-AI2	1	wantonly change	immediately come into force
P1511	Internal speed positive limit value during torque control	RW	rpm	0~6000	3000	wantonly change	immediately come into force
P1512	Internal speed negative limit value during torque control	RW	rpm	0~6000	3000	wantonly change	immediately come into force
P1513	Torque command keyboard setting	RW	%	-3000~3000	0	wantonly change	immediately come into force
P1516	The torque reaches the reference value	RW		0~3000	0	wantonly change	immediately come into force
P1517	The torque reaches the effective value of the hysteresis ring	RW		5394~3000	200	wantonly change	immediately come into force
P1518	The torque reaches the invalid hysteresis value	RW		0~5393	100	wantonly change	immediately come into force
P1523	Speed limited regulator selection	RW		0~1	0	wantonly change	immediately come into force
P1524	Speed-limited window	RW		5~300	10	wantonly change	immediately come into force
16 preset speed task parameters							
P1600		RW	–	0-single run	1		

parameter	name	attribute	unit	Scope of the setting	Factory value	setting way	come into force way
	Preset speed command operation mode			1-Loop operation 2-DI switch operation		halt change	immediately come into force
P1601	Speed instruction end segment number selection	RW		1~16	16	halt change	immediately come into force
P1602	Unit selection for operation time	RW		0-s 1-min	0	halt change	immediately come into force
P1603	Speed up time 1	RW	ms	0~65535	10	halt change	immediately come into force
P1604	Deceleration time 1	RW	ms	0~65535	10	halt change	immediately come into force
P1605	Speed up time 2	RW	ms	0~65535	50	halt change	immediately come into force
P1606	Deceleration time 2	RW	ms	0~65535	50	halt change	immediately come into force
P1607	Speed up time 3	RW	ms	0~65535	100	halt change	immediately come into force
P1608	Deceleration time 3	RW	ms	0~65535	100	halt change	immediately come into force
P1609	Speed up time 4	RW	ms	0~65535	150	halt change	immediately come into force
P1610	Deceleration time 4	RW	ms	0~65535	150	halt change	immediately come into force
P1620	Paragraph 1 directive	RW	rpm	-6000~6000	0	halt change	immediately come into force
P1621	Paragraph 1 running time	RW	P1602	0~65535	50	halt change	immediately come into force
P1622	Paragraph 1 Time of rise and fall	RW		0-zero acceleration time 1-Acceleration and deceleration time 1 2-acceleration and deceleration time 2 3-acceleration and deceleration time 3 4-Acceleration and deceleration time 4	0	Shutdown changes	with immediate effect
P1623	Paragraph 2 instruction	RW	rpm	-6000~6000	100	halt change	immediately come into force
P1624	Paragraph 2 running time	RW	P1602	0~65535	50	halt change	immediately come into force
P1625	Paragraph 2 Time of rise and fall	RW		0-zero acceleration time 1-Acceleration and deceleration time 1 2-acceleration and deceleration time 2 3-acceleration and deceleration time 3	0	Shutdown changes	with immediate effect

parameter	name	attribute	unit	Scope of the setting	Factory value	setting way	come into force way
				4-acceleration and deceleration time 4			
P1626	Paragraph 3 instruction	RW	rpm	-6000~6000	300	halt change	immediately come into force
P1627	Paragraph 3 running time	RW	P1602	0~65535	50	halt change	immediately come into force
P1628	Paragraph 3 Time of rise and fall	RW		0-zero acceleration time 1-Acceleration and deceleration time 1 2-acceleration and deceleration time 2 3-acceleration and deceleration time 3 4-acceleration and deceleration time 4	0	Shutdown changes	with immediate effect
P1629	Paragraph 4 instruction	RW	rpm	-6000~6000	500	halt change	immediately come into force
P1630	Paragraph 4 running time	RW	P1602	0~65535	50	halt change	immediately come into force
P1631	Paragraph 4 Time of rise and fall	RW		0-zero acceleration time 1-acceleration and deceleration time 1 2-acceleration and deceleration time 2 3-acceleration and deceleration time 3 4-acceleration and deceleration time 4	0	Shutdown changes	with immediate effect
P1632	Paragraph 5 instruction	RW	rpm	-6000~6000	700	halt change	immediately come into force
P1633	Paragraph 5. Running time	RW	P1602	0~65535	50	halt change	immediately come into force
P1634	Paragraph 5 Time of rise and fall	RW		0-zero acceleration time 1-Acceleration and deceleration time 1 2-acceleration and deceleration time 2 3-acceleration and deceleration time 3 4-acceleration and deceleration time 4	0	Shutdown changes	with immediate effect
P1635	Paragraph 6 instruction	RW	rpm	-6000~6000	900	halt change	immediately come into force
P1636	Paragraph 6. Run time	RW	P1602	0~65535	50	halt change	immediately come into force
P1637	Paragraph 6 Time of rise and fall	RW		0-zero acceleration time 1-Acceleration and deceleration time 1 2-acceleration and deceleration time 2 3-acceleration and deceleration time 3 4-acceleration and deceleration time 4	0	Shutdown changes	with immediate effect
P1638	Paragraph 7 instruction	RW	rpm	-6000~6000	600	halt change	immediately come into force

parameter	name	attribute	unit	Scope of the setting	Factory value	setting way	come into force way
P1639	Paragraph 7. Running time	RW	P1602	0~65535	50	halt change	immediately come into force
P1640	Paragraph 7 Time of rise and fall	RW		0-zero acceleration time 1-Acceleration and deceleration time 1 2-acceleration and deceleration time 2 3-acceleration and deceleration time 3 4-acceleration and deceleration time 4	0	Shutdown changes	with immediate effect
P1641	Paragraph 8 instruction	RW	rpm	-6000~6000	300	halt change	immediately come into force
P1642	Paragraph 8. Running time	RW	P1602	0~65535	50	halt change	immediately come into force
P1643	Paragraph 8 Time of rise and fall	RW		0-zero acceleration time 1-Acceleration and deceleration time 1 2-acceleration and deceleration time 2 3-acceleration and deceleration time 3 4-acceleration and deceleration time 4	0	Shutdown changes	with immediate effect
P1644	Paragraph 9 instruction	RW	rpm	-6000~6000	100	halt change	immediately come into force
P1645	Paragraph 9: operational time	RW	P1602	0~65535	50	halt change	immediately come into force
P1646	Paragraph 9 Time of rise and fall	RW		0-zero acceleration time 1-Acceleration and deceleration time 1 2-acceleration and deceleration time 2 3-acceleration and deceleration time 3 4-acceleration and deceleration time 4	0	Shutdown changes	with immediate effect
P1647	Paragraph 10 Directive	RW	rpm	-6000~6000	-100	halt change	immediately come into force
P1648	Paragraph 10: operational time	RW	P1602	0~65535	50	halt change	immediately come into force
P1649	Paragraph 10 Time of rise and fall	RW		0-zero acceleration time 1-Acceleration and deceleration time 1 2-acceleration and deceleration time 2 3-acceleration and deceleration time 3 4-acceleration and deceleration time 4	0	Shutdown changes	with immediate effect
P1650	Paragraph 11 Directive	RW	rpm	-6000~6000	-300	halt change	immediately come into force
P1651	Paragraph 11: operational time	RW	P1602	0~65535	50	halt change	immediately come into force
P1652	Paragraph 11 Time of rise and fall	RW	–	0-zero acceleration time	0		

parameter	name	attribute	unit	Scope of setting	Factory value	setting way	come into force way
				1-Acceleration and deceleration time 1 2-acceleration and deceleration time 2 3-acceleration and deceleration time 3 4-acceleration and deceleration time 4		Shutdown changes	with immediate effect
P1653	Paragraph 12 Directive	RW	rpm	-6000~6000	-500	halt change	immediately come into force
P1654	Paragraph 12: operational time	RW	P1602	0~65535	50	halt change	immediately come into force
P1655	Paragraph 12 Time of rise and fall	RW		0-zero acceleration time 1-Acceleration and deceleration time 1 2-acceleration and deceleration time 2 3-acceleration and deceleration time 3 4-acceleration and deceleration time 4	0	Shutdown changes	with immediate effect
P1656	Paragraph 13 Directive	RW	rpm	-6000~6000	-700	halt change	immediately come into force
P1657	Paragraph 13: operational time	RW	P1602	0~65535	50	halt change	immediately come into force
P1658	Paragraph 13 Time of rise and fall	RW		0-zero acceleration time 1-Acceleration and deceleration time 1 2-acceleration and deceleration time 2 3-acceleration and deceleration time 3 4-acceleration and deceleration time 4	0	Shutdown changes	with immediate effect
P1659	Paragraph 14 Directive	RW	rpm	-6000~6000	-900	halt change	immediately come into force
P1660	Paragraph 14. Run time	RW	P1602	0~65535	50	halt change	immediately come into force
P1661	Paragraph 14 Time of rise and fall	RW	-	0-zero acceleration time 1-Acceleration and deceleration time 1 2-acceleration and deceleration time 2 3-acceleration and deceleration time 3 4-Acceleration and deceleration time 4	0	Shutdown changes	with immediate effect
P1662	Paragraph 15 Directive	RW	rpm	-6000~6000	-600	halt change	immediately come into force
P1663	Paragraph 15: operational time	RW	P1602	0~65535	50	halt change	immediately come into force
P1664	Paragraph 15 Time of rise and fall	RW	-	0-zero acceleration time 1-Acceleration and deceleration time 1 2-acceleration and deceleration time 2 3-acceleration and deceleration time 3	0	Shutdown changes	with immediate effect

parameter	name	attribute	unit	Scope of the setting	Factory value	setting way	come into force way
				4-acceleration time 4			
P1665	Paragraph 16 Directive	RW	rpm	-6000~6000	-300	halt change	immediately come into force
P1666	Paragraph 16. Run time	RW	P1602	0~65535	50	halt change	immediately come into force
P1667	Paragraph 16 Time of rise and fall	RW		0-zero acceleration time 1-Acceleration and deceleration time 1 2-acceleration and deceleration time 2 3-acceleration and deceleration time 3 4-acceleration and deceleration time 4	0	Shutdown changes	with immediate effect
17 preset location task parameters							
P1700	Predefined location task operation mode	RW		0-single run 1-Loop operation 2-DI switch operation 3-sequential operation	1	Shutdown changes	with immediate effect
P1701	Positioning movement segment selection	RW	-	1~16	1	halt change	immediately come into force
P1702	Post-processing	RW		0-Continue running the unfinished segment 1-Restart from paragraph 1	0	halt change	immediately come into force
P1703	Waiting time unit	RW		0-ms 1-s	0	halt change	immediately come into force
P1704	Positioning instruction type selection	RW		0-Relative displacement command 1-Absolute displacement command	0	halt change	immediately come into force
P1705	Cycle mode start selection	RW	-	0~16	0	halt change	immediately come into force
P1712	Paragraph 1. Movement	RW	Directive unit	-1073741824~1073741824	10000	wantonly change	immediately come into force
P1714	Paragraph 1 Movement speed	RW	rpm	1~6000	200	wantonly change	immediately come into force
P1715	Paragraph 1 Time of acceleration and deceleration	RW	ms	0~65535	10	wantonly change	immediately come into force
P1716	Time to wait after the first phase of displacement	RW	P1703	0~10000	10	wantonly change	immediately come into force
P1717	Paragraph 2. Movement	RW	Directive unit	-1073741824~1073741824	10000	wantonly change	immediately come into force
P1719	Paragraph 2 Movement speed	RW	rpm	1~6000	200	wantonly change	immediately come into force
P1720	Paragraph 2. Acceleration and deceleration time	RW	ms	0~65535	10	wantonly change	immediately come into force

parameter	name	attribute	unit	Scope of the setting	Factory value	setting way	come into force way
P1721	Time to wait after the second stage of displacement	RW	P1703	0~10000	10	wantonly change	immediately come into force
P1722	Paragraph 3. Movement	RW	Directive unit	-1073741824~1073741824	10000	wantonly change	immediately come into force
P1724	Paragraph 3 Movement speed	RW	rpm	1~6000	200	wantonly change	immediately come into force
P1725	Paragraph 3 acceleration and deceleration time	RW	ms	0~65535	10	wantonly change	immediately come into force
P1726	Time to wait after the third stage of displacement	RW	P1703	0~10000	10	wantonly change	immediately come into force
P1727	Paragraph 4. Movement	RW	Directive unit	-1073741824~1073741824	10000	wantonly change	immediately come into force
P1729	Paragraph 4 Movement speed	RW	rpm	1~6000	200	wantonly change	immediately come into force
P1730	Paragraph 4. Acceleration and deceleration time	RW	ms	0~65535	10	wantonly change	immediately come into force
P1731	Time to wait after the fourth displacement	RW	P1703	0~10000	10	wantonly change	immediately come into force
P1732	Paragraph 5. Movement	RW	Directive unit	-1073741824~1073741824	10000	wantonly change	immediately come into force
P1734	Paragraph 5 Movement speed	RW	rpm	1~6000	200	wantonly change	immediately come into force
P1735	Paragraph 5 acceleration and deceleration time	RW	ms	0~65535	10	wantonly change	immediately come into force
P1736	Time to wait after the fifth displacement	RW	P1703	0~10000	10	wantonly change	immediately come into force
P1737	Paragraph 6. Movement	RW	Directive unit	-1073741824~1073741824	10000	wantonly change	immediately come into force
P1739	Paragraph 6. Movement speed	RW	rpm	1~6000	200	wantonly change	immediately come into force
P1740	Paragraph 6. Acceleration and deceleration time	RW	ms	0~65535	10	wantonly change	immediately come into force
P1741	Time to wait after the sixth stage of displacement	RW	P1703	0~10000	10	wantonly change	immediately come into force
P1742	Paragraph 7. Movement	RW	Directive unit	-1073741824~1073741824	10000	wantonly change	immediately come into force
P1744	Paragraph 7 Speed of movement	RW	rpm	1~6000	200	wantonly change	immediately come into force

parameter	name	attribute	unit	Scope of the setting	Factory value	setting way	come into force way
P1745	Paragraph 7 acceleration and deceleration time	RW	ms	0~65535	10	wantonly change	immediately come into force
P1746	Time to wait after the 7 th segment is moved	RW	P1703	0~10000	10	wantonly change	immediately come into force
P1747	Paragraph 8. Movement	RW	Directive unit	-1073741824~1073741824	10000	wantonly change	immediately come into force
P1749	Paragraph 8. Movement speed	RW	rpm	1~6000	200	wantonly change	immediately come into force
P1750	Paragraph 8. Acceleration and deceleration time	RW	ms	0~65535	10	wantonly change	immediately come into force
P1751	Time to wait after the 8th displacement	RW	P1703	0~10000	10	wantonly change	immediately come into force
P1752	Paragraph 9. Movement	RW	Directive unit	-1073741824~1073741824	10000	wantonly change	immediately come into force
P1754	Paragraph 9. Movement speed	RW	rpm	1~6000	200	wantonly change	immediately come into force
P1755	Paragraph 9. Acceleration and deceleration time	RW	ms	0~65535	10	wantonly change	immediately come into force
P1756	Time to wait after the 9th position shift	RW	P1703	0~10000	10	wantonly change	immediately come into force
P1757	Paragraph 10. Movement	RW	Directive unit	-1073741824~1073741824	10000	wantonly change	immediately come into force
P1759	Paragraph 10 Speed of movement	RW	rpm	1~6000	200	wantonly change	immediately come into force
P1760	Paragraph 10 Time of acceleration and deceleration	RW	ms	0~65535	10	wantonly change	immediately come into force
P1761	Time to wait after the 10 th segment is shifted	RW	P1703	0~10000	10	wantonly change	immediately come into force
P1762	Paragraph 11. Movement	RW	Directive unit	-1073741824~1073741824	10000	wantonly change	immediately come into force
P1764	Paragraph 11 Speed of movement	RW	rpm	1~6000	200	wantonly change	immediately come into force
P1765	Paragraph 11 Time of acceleration and deceleration	RW	ms	0~65535	10	wantonly change	immediately come into force
P1766	Time to wait after the 11 th segment is moved	RW	P1703	0~10000	10	wantonly change	immediately come into force
P1767	Paragraph 12: Movement	RW	Directive unit	-1073741824~1073741824	10000	wantonly change	immediately come into force

parameter	name	attribute	unit	Scope of the setting	Factory value	setting way	come into force way
P1769	Paragraph 12 Speed of movement	RW	rpm	1~6000	200	wantonly change	immediately come into force
P1770	Paragraph 12 Time of acceleration and deceleration	RW	ms	0~65535	10	wantonly change	immediately come into force
P1771	Time to wait after the 12 th segment is moved	RW	P1703	0~10000	10	wantonly change	immediately come into force
P1772	Paragraph 13: Movement	RW	Directive unit	-1073741824~1073741824	10000	wantonly change	immediately come into force
P1774	Paragraph 13 Speed of movement	RW	rpm	1~6000	200	wantonly change	immediately come into force
P1775	Paragraph 13 Time of acceleration and deceleration	RW	ms	0~65535	10	wantonly change	immediately come into force
P1776	Time to wait after the 13th paragraph shift	RW	P1703	0~10000	10	wantonly change	immediately come into force
P1777	Paragraph 14: Movement	RW	Directive unit	-1073741824~1073741824	10000	wantonly change	immediately come into force
P1779	Paragraph 14 Speed of movement	RW	rpm	1~6000	200	wantonly change	immediately come into force
P1780	Paragraph 14 Time of acceleration and deceleration	RW	ms	0~65535	10	wantonly change	immediately come into force
P1781	Time to wait after the 14th paragraph shift	RW	P1703	0~10000	10	wantonly change	immediately come into force
P1782	Paragraph 15. Movement	RW	Directive unit	-1073741824~1073741824	10000	wantonly change	immediately come into force
P1784	Paragraph 15 Speed of movement	RW	rpm	1~6000	200	wantonly change	immediately come into force
P1785	Paragraph 15 Time of acceleration and deceleration	RW	ms	0~65535	10	wantonly change	immediately come into force
P1786	Time to wait after the 15th paragraph shift	RW	P1703	0~10000	10	wantonly change	immediately come into force
P1787	Paragraph 16. Movement	RW	Directive unit	-1073741824~1073741824	10000	wantonly change	immediately come into force
P1789	Paragraph 16 Speed of movement	RW	rpm	1~6000	200	wantonly change	immediately come into force
P1790	Paragraph 16 Time of acceleration and deceleration	RW	ms	0~65535	10	wantonly change	immediately come into force
P1791	Time to wait after the 16th paragraph shift	RW	P1703	0~10000	10	wantonly change	immediately come into force

parameter	name	attribute	unit	Scope of the setting	Factory value	setting way	come into force way
P1792	Current segment display	RW	–	0~16	0	halt change	immediately come into force
1A Senior adjustments							
P1A00	Real-time self-adjustment setting	RW		0-Off 1-Standard rigid surface pattern 2-Quick location mode 5-Adaptive interpolation mode 7-Adaptive positioning mode	7	Any changes	with immediate effect
P1A01	Response level setting	RW	level	0~40	16	wantonly change	immediately come into force
P1A02	Vibration suppression mode selection	RW		0-Off 1-Vibration suppression 3 effective 2-Vibration suppression 3 and 4 effective 3-P1A.14 Show resonance frequency 4-Restore vibration suppression 3 and 4	0	Any changes	with immediate effect
P1A06	Maximum speed of inertial identification	RW	rpm	100~1000	500	halt change	immediately come into force
P1A07	Inertial identification acceleration time	RW	ms	20~800	125	halt change	immediately come into force
P1A08	Inertial identification waiting time	RW	ms	50~10000	800	halt change	immediately come into force
P1A09	Inertial identification number of rotations	RW	0.01 Circle	0~65535	100	wantonly change	immediately come into force
P1A18	Jitter compensation gain	RW	0.1%	-1000~1000	0	wantonly change	immediately come into force
P1A19	Jitter filter time	RW	ms	0~2500	50	wantonly change	immediately come into force
P1A20	Offset compensation	RW	0.1%	-1000~1000	0	wantonly change	immediately come into force
P1A21	Positive friction compensation	RW	0.1%	-1000~1000	0	wantonly change	immediately come into force
P1A22	Back friction compensation	RW	0.1%	-1000~1000	0	wantonly change	immediately come into force
P1A23	Friction compensation speed	RW	0.1rpm	1~300	20	wantonly change	immediately come into force
P1A24	Friction compensation speed selection	RW	–	0~18	0	wantonly change	immediately come into force
P1A25	Low frequency vibration detection enabled	RW		0-Off 1-On	0	wantonly change	immediately come into force

parameter	name	attribute	unit	Scope of the setting	Factory value	setting way	come into force way
20 Auxiliary parameters							
P2002	emergency shut down	RW		0-no operation 1-Emergency shutdown	0	wantonly change	immediately come into force
P2003	Fault reset	RW		0-no operation 1-Fault reset	0	halt change	immediately come into force
P2004	Software reset	RW		0-no operation 1-Software reset	0	halt change	immediately come into force
P2005	Encoder reset	RW		0-no operation 1-Reset fault 2-Reset fault and number of turns	0	Shutdown changes	with immediate effect
P2006	Read and write encoder parameters	RW	–	0-no operation 1-write operations 2-Read operations	0	Shutdown changes	with immediate effect
P2038	Call enable	RW		0~1	0	wantonly change	immediately come into force
P2040	The bus reads the servo status	RO		0~65535	0	show	immediately come into force
P2041	The bus reads the low 16 bits of DO	RO		0~65535	0	show	immediately come into force
P2042	The bus reads the high 16 bits of DO	RO		0~65535	0	show	immediately come into force
P2043	The bus reads the pulse instruction sampling value	RO	p	0~65535	0	show	immediately come into force
P2050	The bus is given a VDI level	RW		0~65535	0	wantonly change	immediately come into force
P2051	The bus is given a DO output	RW	–	0~31	0	wantonly change	immediately come into force
21 Fault diagnosis parameters							
P2100	Abnormal parameter group number	RO		0~65535	0	show	immediately come into force
P2101	Bias in the abnormal parameter group	RO		0~65535	0	show	immediately come into force
P2102	FPGA side system status information	RO		0~65535	0	show	immediately come into force
P2103	FPGA side system fault information	RO		0~65535	0	show	immediately come into force
P2104	FPGA side timeout fault information	RO		0~65535	0	show	immediately come into force

parameter	name	attribute	unit	Scope of the setting	Factory value	setting way	come into force way
P2105	FPGA side encoder fault information	RO		0~65535	0	show	immediately come into force
P2106	Encoder status information	RW		0~65535	0	wantonly change	immediately come into force
P2108	Current fault code	RO		0~65535	0	show	immediately come into force
P2130	Fault log query	RW		0-Current fault 1-Last failure 2-Last two failures 3-Last three failures 4-Last 4 failures 5-Last 5 failures 6-Last 6 failures 7-Last 7 failures 8-Last 8 failures 9-Last 9 failures	0	Any changes	with immediate effect
P2131	The selected fault code	RO		0~65535	0	show	immediately come into force
P2132	The selected fault is an internal fault code	RO		0~65535	0	show	immediately come into force
P2133	Selected fault time stamp	RO	0.1s	0~4294967295	0	show	immediately come into force
P2135	Rated speed at failure	RO	rpm	-32767~32767	0	show	immediately come into force
P2136	The selected fault U phase current	RO	0.01A	-32767~32767	0	show	immediately come into force
P2137	V phase current at the selected fault	RO	0.01A	-32767~32767	0	show	immediately come into force
P2138	Bus voltage at selected fault	RO	0.1V	0~65535	0	show	immediately come into force
P2139	The selected fault is the DI input status	RO		0~65535	0	show	immediately come into force
P2140	The output status of DO is selected when a fault occurs	RO		0~65535	0	show	immediately come into force
P2141	The system status information on the FPGA side during the selected fault	RO	-	0~65535	0	show	immediately come into force
P2142	The selected fault is the system fault information on the FPGA side	RO		0~65535	0	show	immediately come into force

parameter	name	attribute	unit	Scope of the setting	Factory value	setting way	come into force way
P2143	Overdue fault information on FPGA side for selected faults	RO	-	0~65535	0	show	immediately come into force
P2144	The selected fault is the encoder fault information on the FPGA side	RO	-	0~65535	0	show	immediately come into force
P2145	Encoders state information for selected faults	RO	-	0~65535	0	show	immediately come into force
23 Virtual IO parameters							
P2300	VDI enable	RW	-	0-disabled 1-Enable	0	halt change	immediately come into force
P2301	VDI power on initial state	RW	-	0~65535	0	wantonly change	again power on
P2302	V. Enablement	RW	-	0-disabled 1-Enable	0	halt change	immediately come into force
P2303	The default value of VDO when it is not defined	RW		0x0-VDO1 default value 0x1-VDO2 default value 0x2-VDO3 default value 0x3-VDO4 default value Default value for 0x4-VDO5 0x5-VDO6 default value 0x6-VD07 Default value 0x7-VDO8 Default value 0x8-VDO9 Default values 0x9-VDO10 Default values 0xa-VDO11 default value 0xb-VDO12 default value 0xc-VDO13 default value 0xd-VDO14 default value 0xe-VDO15 default value 0xf-VDO16 default value	0	Shutdown changes	with immediate effect
P2306	VDI1 functionality	RW		0-undefined 1-Servo enable 2-Emergency shutdown 3. Injunction 4-Position deviation clearance 5-Fault reset 6-Zero speed holding 7-Positive nodding 8-Reverse point motion 9-Positive limit	0	Any changes	with immediate effect

parameter	name	attribute	unit	Scope of the setting	Factory value	setting way	come into force way
				10-Reverse limit 11-Origin switch 12-Reset enable 13-Speed limit selection 14-Positive torque limit selection 15-Reverse torque limit selection 16-Preset Position Enable 19-Torque command direction switch 20-Speed command direction change 21-Position command direction switch 22-Gain Switching Options 23-Switching between instructions 24-Mode Switch 1 25-Mode switch 2 26-Electronic gear switching 27-Preset instruction selection 1 28-Preset instruction selection 2 29-Preset instruction selection 3 30-Preset instruction selection 4 31-Take the current DI trigger point as the origin			
P2307	VDI1 polarity	RW		0-write 1 valid 1-Write rising edge valid (0->1)	0	wantonly change	immediately come into force
P2308	VDI2 functionality	RW		Refer to VDI1 functionality	0	wantonly change	immediately come into force
P2309	VDI2 polarity	RW		0-write 1 valid 1-Write rising edge valid (0->1)	0	wantonly change	immediately come into force
P2310	VDI3 functionality	RW		Refer to VDI1 functionality 1-Servo enable	0	wantonly change	immediately come into force
P2311	VDI3 polarity	RW		0-write 1 valid 1-Write rising edge valid (0->1)	0	wantonly change	immediately come into force
P2312	VDI4 functionality	RW		Refer to VDI1 functionality	0	wantonly change	immediately come into force
P2313	VDI4 polarity	RW		0-write 1 valid 1-Write rising edge valid (0->1)	0	wantonly change	immediately come into force
P2314	VDI5 functionality	RW	-	Refer to VDI1 functionality	0	wantonly change	immediately come into force
P2315	VDI5 polarity	RW		0-write 1 valid 1-Write rising edge valid (0->1)	0	wantonly change	immediately come into force

parameter	name	attribute	unit	Scope of the setting	Factory value	setting way	come into force way
P2316	VDI6 functionality	RW		Refer to VDI1 functionality	0	wantonly change	immediately come into force
P2317	VDI6 polarity	RW		0-write 1 valid 1-Write rising edge valid (0->1)	0	wantonly change	immediately come into force
P2318	VDI7 functionality	RW		Refer to VDI1 functionality	0	wantonly change	immediately come into force
P2319	VDI7 polarity	RW		0-write 1 valid 1-Write rising edge valid (0->1)	0	wantonly change	immediately come into force
P2320	VDI8 functionality	RW		Refer to VDI1 functionality	0	wantonly change	immediately come into force
P2321	VDI8 polarity	RW		0-write 1 valid 1-Write rising edge valid (0->1)	0	wantonly change	immediately come into force
P2322	VDI9 functionality	RW		Refer to VDI1 functionality	0	wantonly change	immediately come into force
P2323	VDI9 polarity	RW		0-write 1 valid 1-Write rising edge valid (0->1)	0	wantonly change	immediately come into force
P2324	VDI10 functionality	RW		Refer to VDI1 functionality	0	wantonly change	immediately come into force
P2325	VDI10 polarity	RW		0-write 1 valid 1-Write rising edge valid (0->1)	0	wantonly change	immediately come into force
P2326	VDI11 functionality	RW		Refer to VDI1 functionality	0	wantonly change	immediately come into force
P2327	VDI11 polarity	RW		0-write 1 valid 1-Write rising edge valid (0->1)	0	wantonly change	immediately come into force
P2328	VDI12 functionality	RW		Refer to VDI1 functionality	0	wantonly change	immediately come into force
P2329	VDI12 polarity	RW		0-write 1 valid 1-Write rising edge valid (0->1)	0	wantonly change	immediately come into force
P2330	VDI13 functionality	RW		Refer to VDI1 functionality	0	wantonly change	immediately come into force
P2331	VDI13 polarity	RW		0-write 1 valid 1-Write rising edge valid (0->1)	0	wantonly change	immediately come into force
P2332	VDI14 functionality	RW		Refer to VDI1 functionality	0	wantonly change	immediately come into force
P2333	VDI14 polarity	RW		0-write 1 valid 1-Write rising edge valid (0->1)	0	wantonly change	immediately come into force
P2334	VDI15 functionality	RW		Refer to VDI1 functionality	0	wantonly change	immediately come into force
P2335	VDI15 polarity	RW		0-write 1 valid	0		

parameter	name	attribute	unit	Scope of the setting	Factory value	setting way	come into force way
				1-Write rising edge valid (0->1)		wantonly change	immediately come into force
P2336	VDI16 functionality	RW		Refer to VDI1 functionality	0	wantonly change	immediately come into force
P2337	VDI16 polarity	RW		0-write 1 valid 1-Write rising edge valid (0->1)	0	wantonly change	immediately come into force
P2342	VDO output level	RO	-	0~65535	0	show	immediately come into force
P2343	VDO1 function	RW		0-undefined 1-Servo ready (rdy) 2-Servo operation (Run) 3-Servo warning output (Warn) 4-Servo fault output (PRror) 5-Motor movement (TGon) 6-Zero Speed Signal (ZPRo) 7-speed consistency (VCmp) 8-speed arrival (VArr) 9-Torque arrival (TArr) 10-Positioning close (Near) 11-Position arrival (Coin) 12-Torque limit (Clt) 13-Speed limit (Vlt) 14-return to zero (HomeOK) 15-Electric return to zero completed (eHomeOK) 17-Brake Control (BK) 18-Dynamic Braking (DB) 19-Magnetic pole identification completed (AngRdy)	0	Any changes	with immediate effect
P2344	VDO1 polarity	RW		0-Output 1 when valid 1-Output 0 when effective	0	wantonly change	immediately come into force
P2345	VDO2 functionality	RW		Refer to VDO1 functionality	0	wantonly change	immediately come into force
P2346	VDO2 polarity	RW	-	0-Output 1 when valid 1-Output 0 when effective	0	wantonly change	immediately come into force
P2347	VDO3 functionality	RW		Refer to VDO1 functionality	0	wantonly change	immediately come into force
P2348	VDO3 polarity	RW	-	0-Output 1 when valid 1-Output 0 when effective	0	wantonly change	immediately come into force
P2349	VDO4 functionality	RW		Refer to VDO1 functionality	0	wantonly change	immediately come into force

parameter	name	attribute	unit	Scope of the setting	Factory value	setting way	come into force way
P2350	VDO4 polarity	RW		0-Output 1 when valid 1-Output 0 when valid	0	wantonly change	immediately come into force
P2351	VDO5 functionality	RW		Refer to VDO1 functionality	0	wantonly change	immediately come into force
P2352	VDO5 polarity	RW		0-Output 1 when valid 1-Output 0 when valid	0	wantonly change	immediately come into force
P2353	VDO6 functionality	RW		Refer to VDO1 functionality	0	wantonly change	immediately come into force
P2354	VDO6 polarity	RW		0-Output 1 when valid 1-Output 0 when effective	0	wantonly change	immediately come into force
P2355	VD07 functions	RW		Refer to VDO1 functionality	0	wantonly change	immediately come into force
P2356	VD07 polarity	RW		0-Output 1 when valid 1-Output 0 when valid	0	wantonly change	immediately come into force
P2357	VDO8 functionality	RW	-	Refer to VDO1 functionality	0	wantonly change	immediately come into force
P2358	VDO8 polarity	RW		0-Output 1 when valid 1-Output 0 when effective	0	wantonly change	immediately come into force
P2359	VD09 functionality	RW		Refer to VDO1 functionality	0	wantonly change	immediately come into force
P2360	VD09 polarity	RW		0-Output 1 when valid 1-Output 0 when effective	0	wantonly change	immediately come into force
P2361	VDO10 functionality	RW		Refer to VDO1 functionality	0	wantonly change	immediately come into force
P2362	VDO10 polarity	RW	-	0-Output 1 when valid 1-Output 0 when valid	0	wantonly change	immediately come into force
P2363	VDO11 functionality	RW		Refer to VDO1 functionality	0	wantonly change	immediately come into force
P2364	VDO11 polarity	RW		0-Output 1 when valid 1-Output 0 when valid	0	wantonly change	immediately come into force
P2365	VDO12 functionality	RW		Refer to VDO1 functionality	0	wantonly change	immediately come into force
P2366	VDO12 polarity	RW		0-Output 1 when valid 1-Output 0 when effective	0	wantonly change	immediately come into force
P2367	VDO13 functionality	RW		Refer to VDO1 functionality	0	wantonly change	immediately come into force
P2368	VDO13 polarity	RW		0-Output 1 when valid 1-Output 0 when valid	0	wantonly change	immediately come into force

parameter	name	attribute	unit	Scope of the setting	Factory value	setting way	come into force way
P2369	VDO14 functionality	RW	-	Refer to VDO1 functionality	0	wantonly change	immediately come into force
P2370	VDO14 polarity	RW		0-Output 1 when valid 1-Output 0 when effective	0	wantonly change	immediately come into force
P2371	VDO15 functionality	RW	-	Refer to VDO1 functionality	0	wantonly change	immediately come into force
P2372	VDO15 polarity	RW		0-Output 1 when valid 1-Output 0 when effective	0	wantonly change	immediately come into force
P2373	VDO16 functionality	RW	-	Refer to VDO1 functionality	0	wantonly change	immediately come into force
P2374	VDO16 polarity	RW	-	0-Output 1 when valid 1-Output 0 when effective	0	wantonly change	immediately come into force

7.2 DIDO Functional Definition

Function number	Function name	description
Input signal function description		
1	Servo enablement	Effective-Servo motor power up enable Invalid-Servo motor enable disable
2	emergency shut down	Effectively-position locked after zero speed stop; Invalid-has no effect on the current running status.
3	Inadmissibility of instructions	Effective-Disable input of position commands Invalid-Position instruction input is allowed
4	Location bias removal (along the effective function)	Effectively-zero position deviation; Invalid-The position deviation is not cleared.
5	Fault reset (Effective border function)	Invalid-Prohibited; Effective-enable.
6	Zero speed holding	Effective-enables the zero bit lock function; Invalid-disable the zero bit lock function.
7	Positive nodding	Effective-as input to a given instruction; Invalid-Stop input by running the command.
8	Counterpoint	Effective-Reverse input according to a given instruction;

Function number	Function name	description
		Invalid-Stop input by running the command.
6	Positive Limiting	Effective-disable positive drive; Invalid-allow positive drive.
10	Reverse Limitation	Effective-prohibit reverse drive; Invalid-allows reverse drive.
11	Origin switch	Invalid-no trigger. Valid-trigger.
12	Zeroing enabled	Invalid-disable valid-enable
13	Speed limit selection	Effective-The absolute value of the torque command reaches the set value Invalid-The absolute value of the torque command is less than the set value
14	Forward torque limit selection	According to the selection of P15.03, the switching of torque limiting sources is performed.
15	Reverse torque limit selection	According to the selection of P15.03, the switching of torque limiting sources is performed.
16	Preset position enabled	Effective-servo motor runs multiple position commands; Invalid-The servo motor is locked;
19	Switch the direction of the torque command	Invalid-positive direction; Effective-reverse direction.
20	Direction selection for speed instructions	Invalid-Positive direction; Effective-reverse direction.
21	Location instruction direction switch	Invalid-the direction of the actual position instruction is the same as the direction of the set position instruction; Effective-the direction of the actual position instruction is opposite to the direction of the set position instruction;
22	Gain switching options	■ P06.15=0 when: Invalid-speed control loop is PI control; The effective speed control loop is P control. ■ P06.15=1 when: Follow the Settings of P06.16.
23	Operation command switching	Invalid-The current instruction is A Effective-The current instruction is B
24	Mode switch 1	According to the selected control mode (3, 4, 5), switch between speed, position and torque modes

Function number	Function name	description
25	Mode switch 2	According to the selected control mode (6), the switching between speed, position and torque modes is performed
26	Gear change	Invalid-Electronic gear ratio 1 Effective-electronic gear ratio 2
27	Predefined instruction selection 1	16 preset instruction options
28	Predefined instruction selection 2	16 preset instruction options
29	Predefined instruction selection 3	16 preset instruction options
30	Predefined instruction selection 4	16 preset instruction options.
31	Take the current DI trigger point as the origin	Effective: Triggered Invalid: Not triggered

Function number	Function name	description	remarks
Output signal function description			
1	Servo ready (rdy)	The servo is ready to receive the S-ON valid signal: Effective-Servo ready; Invalid-The servo is not ready.	Servo not ready: The servo has a type 1 or type 2 fault, or the DI emergency shutdown is valid.
2	Servo operation (Run)	The servo is currently in RUN state and can receive instructions: Effective-servo can run; Invalid-The servo cannot be run.	–
3	Servo warning output (Warn)	The warning output signal is valid. (Conduction)	
4	Servo fault output (PRror)	The status is valid when a fault is detected.	–
5	Motor sport (TGon)	When the speed of the servo motor is higher than the motor motion state threshold P14.12: Effective-motor motion signal effective; Invalid-The motor motion signal is invalid.	
6	Zero Speed Signal (ZPRo)	When the servo motor stops rotating, the output signal is valid-the motor speed is zero; invalid-the motor speed is not zero.	
7	Speed is the same (VCmp)	The absolute difference between the speed of the servo motor and the speed command during speed control	

Function number	Function name	description	remarks
		The value is less than P14.14, the speed reaches the threshold, and the time satisfies P07.76, which is valid.	
8	Speed reached (VArr)	Effective-the speed feedback reaches the set value; ineffective-the speed feedback does not reach the set value.	
9	Torque reach (TArr)	Effective-the absolute value of torque reaches the set value; ineffective-the absolute value of torque is less than the set value.	–
10	Location is close (Near)	Position control is valid when the position deviation pulse reaches the amplitude of the positioning approach signal P13.09.	
11	Location arrival (Coin)	During position control, the position deviation pulse is valid if the position arrival signal window P13.08 is satisfied and the time is satisfied by the position arrival signal hold time P13.10.	
12	Torque limit (Clt)	Confirmation signal of torque limit: valid-the motor torque is limited; invalid-the motor torque is not limited.	
13	Speed limit (Vlt)	Confirmation signal of speed limitation during torque control: Effective-motor speed limited; Invalid-Motor speed is not limited.	–
14	Return to zero completed (HomeOK)	Effective-return to zero; invalid-return to zero not completed;	
17	Brake control (BK)	Brake signal output: effective-closed, release the brake; invalid-start the brake.	
18	dynamic braking (DB)	Effective-the dynamic brake relay is disconnected, and the dynamic brake is effective; Invalid-the dynamic brake relay is engaged, and the dynamic brake is invalid;	
19	Polarization identification completed (AngRdy)	Effective-Magnetic pole identification completed; Invalid-Magnetic pole identification completed;	–