# Dimension

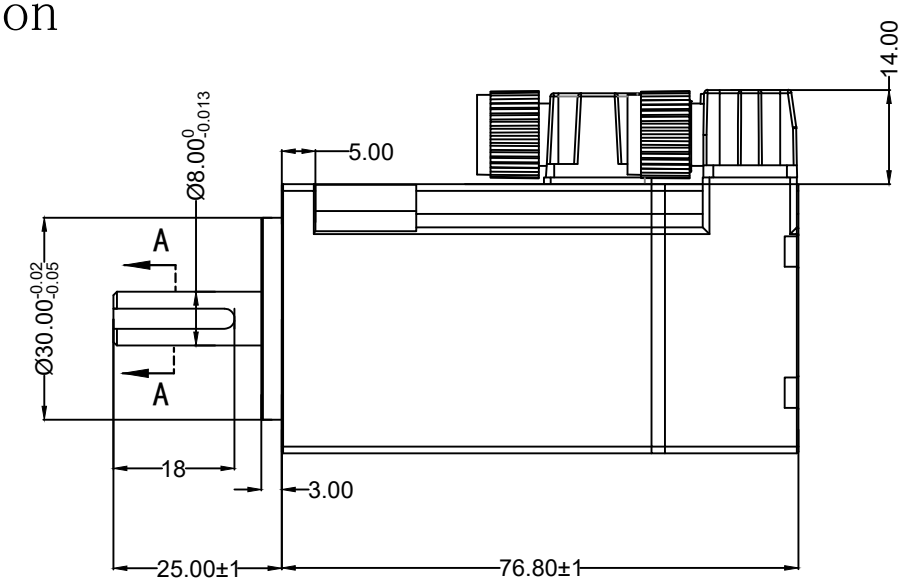


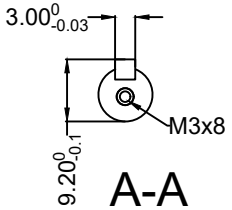


A-A

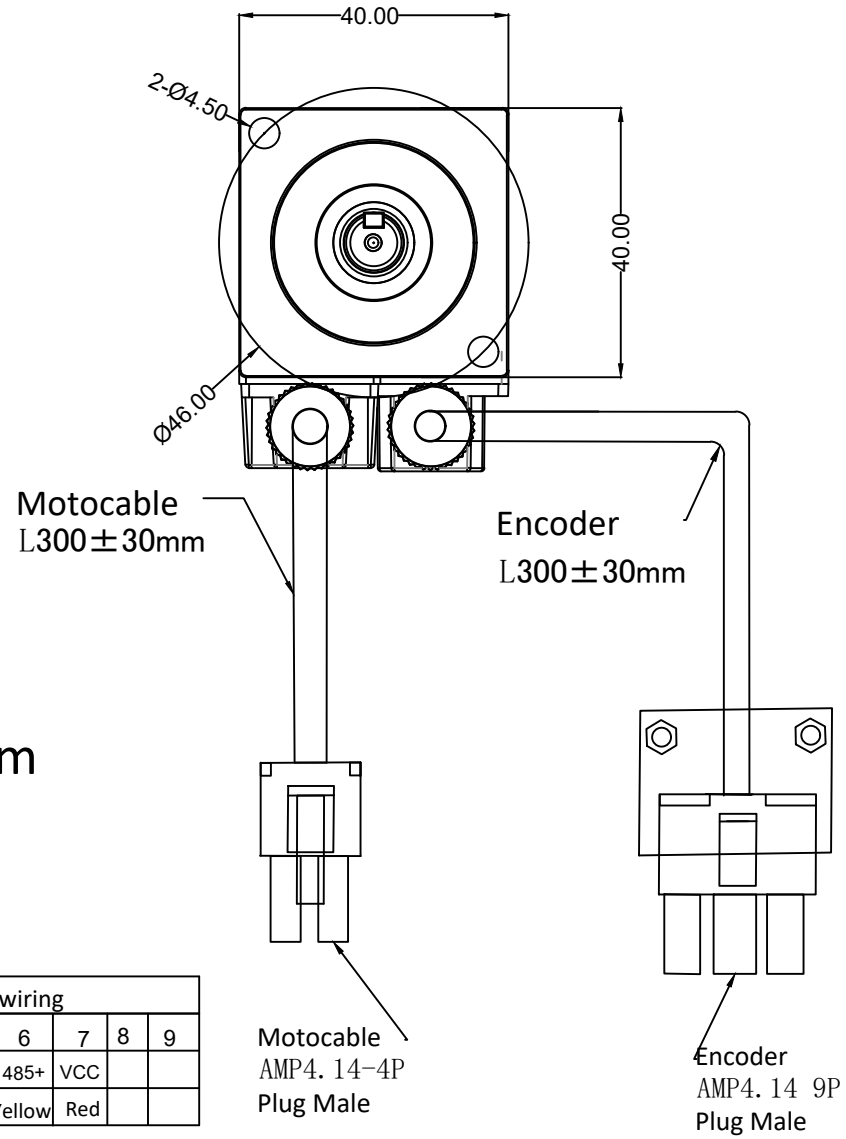


## Wiring Diagram

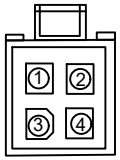


| Motocable connection | | | |
|---|---|---|---|
| 1 | 2 | 3 | 4 |
| U | V | W | PE |
| Black | white | Red | Yellow/Green |

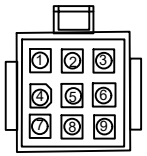


| Encoder connection wiring | | | | | | | | |
|---|---|---|---|---|---|---|---|---|
| 1 | 2 | 3 | 4 | 5 | 6 | 7 | 8 | 9 |
| PE | | | 485- | GND | 485+ | VCC | | |
| shielded wire | | | Green | White | Yellow | Red | | |

## Specification

| | | | |
|---|---|---|---|
| Rated Voltage | 220V | Line-line Resistance | 16Ω |
| Rated Power | 100W | Phase Inductance | 5.5mh |
| Rated Current | 1A | Electrical time constant | 0.34MS |
| Rated RPM | 3000rpm | Pole-pairs | 5 |
| Rated Torque | 0.32N.m | Encoder | 17bit |
| Peak RPM | 5000rpm | Rotor Inertia | $0.04X10^{-4}Kg.m^2$ |
| Max Momentary Current | 3A | Withstand Voltage | 1500V 5s |
| Max Momentary Torque | 0.96N.m | Insulation Resistance | 500V ≥20MΩ |
| Torque Coefficient | 0.32 | Protection grade | IP65 |
| Counter electromotive force(U) | 21(V/1000r/m) | Motor Insulation Class | F |
| Ambient Temperature | -20°C-50°C | Weight | 0.75kg |

| 标记 | 处数 | 更改文件号 | 签 字 | 日期 |
|---|---|---|---|---|
| 设 计 | | 日 期 | 2025-9-13 | |
| 审 核 | | 日 期 | | |
| 校 核 | | 日 期 | | |
| 批 准 | | 日 期 | | |

HR3-PR2R8S2 CM

40BSF-M01030-008Z-Z0.3(CRS)

| 图 样 标 记 | | 重 量 | 比 例 |
|---|---|---|---|
| | | | |
| 版本号 | | 第 张 共 张 | |