QÍLEE

GREEN INNOVATION SHARE RESPONSIBILITY

Pump Environmental protection equipment

—— Professional supplier

submersible solid handling pump

上海祁立环保设备有限公司

Shanghai QILEE Environmental Protection Equipment Co.,Ltd

PS submersible solid handling pump

Application

- Wastewater lift station.
- Municipal wastewater treatment plant.
- Building wastewater treatment system.
- Livestock animal nusbardy wastewater treatment system.
- Hospital, school, community, etc. wastewater treatment system.
- Food, paper, mining, textile, leather, chemical industry, etc. wastewater treatment system.
- Water purification system.

Type description

PS 50 - 0.75

- 0.75 — Rated power(kW)
- 50 — Outlet diameter(mm)
- PS — Subermersible solid handling pump

Features

- **Motor**

  Squirrel-cage, induction motors are F class insulation, motor protection grade is IP68.

- **Non-clog impeller**

  Well statically & dynamically balanced Non-Clog impeller is designed to allow sizable spherical solids to pass the flow passage easily without clogging. It adopts rigorous technics so that vibration and noise can be farthest reduced.

- **Mechanical seal**

  The mechanical seals protect the motor from contacting the pumping liquids. Two seals are in series with each other and individually work to provide the motor with a dual protection.

- **Auto-setter(options)**

  To allow pump for easy installation, maintenance & reparation, as it is no need to empty the tank first.

Construction

NO.	名称	Name	材质 Material GB	JIS
1	吊环	Neck bolt	2Cr13	SUS420
2	过热保护器	Heat-Protector	-	-
3	马达盖	Motor cover	HT200	FC200
4-1	轴承	Bearing	-	-
4-2	轴承	Bearing	-	-
5	水冷套法兰	Cooling house flange	Q215A	LSS330
6	主轴	Shaft	2Cr13	SUS420
7	转子	Rotor	-	-
8	定子	Stator	-	-
9	水冷夹套	Cooling house	0Cr18Ni9	SUS304
10	轴承压盖	Bearing cover	HT200	FC200
11	马达本体	Motor casing	HT200	FC200
12	中承座	Bracket	HT200	FC200
13	漏水检知器	Leakage detector	-	-
14-1	机械密封	Mechanical seal	C-Al2O3	C-Al2O3
14-2	机械密封	Mechanical seal	SiC-SiC	SiC-SiC
15	油箱	Oil box	HT200	FC200
16	油箱底盖	Oil cover	HT200	FC200
17	止退垫圈	Washer	0Cr18Ni9	SUS304
18	叶轮螺母	Impeller nut	HT200	FC200
19	密封环	Seal-ring	LBC2	LBC2
20	滤底座	Strainer	HT200	FC200
21	叶轮	Impeller	HT200	FC200
22	泵体	Pump casing	HT200	FC200
23	泵体底盖	Bottom cover	HT200	FC200
24	引导管	Pail piping	Q215A	SS330/SS34
25	配合凸缘	Flange setter	HT200	FC200
26	引导板	Slide	HT200	FC200
27	着脱	Duckfoot	HT200	FC200
28	出水口	Discharge	Q215A	SS330/SS34

Different model has a little difference.

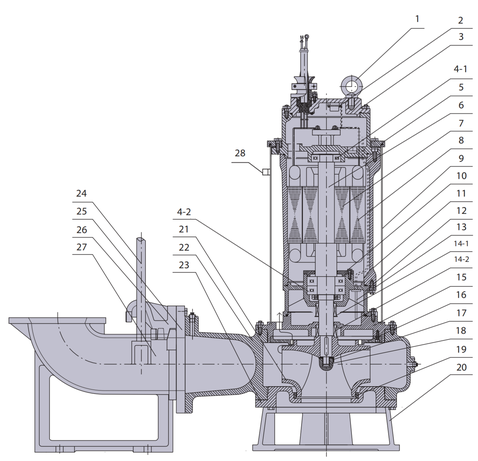

Formance chart

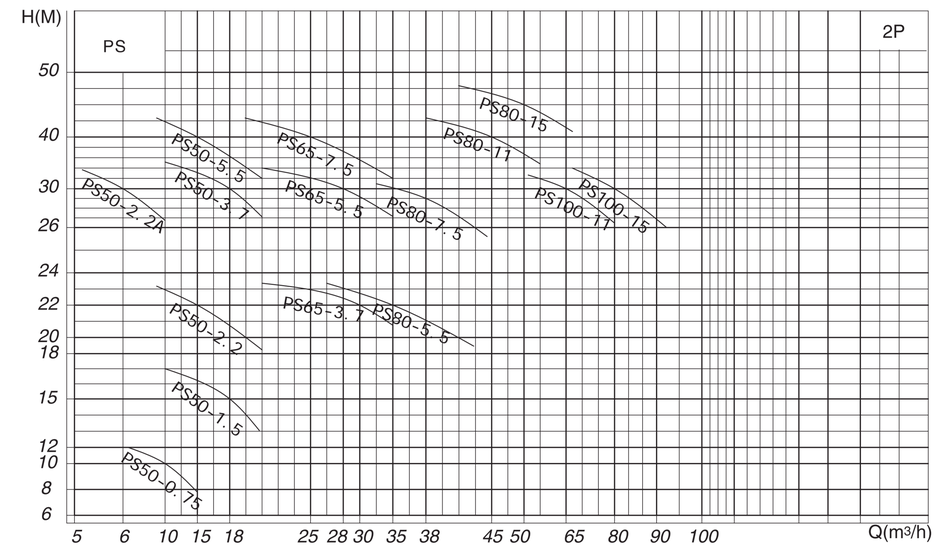

Formance chart 4P/6P/8P

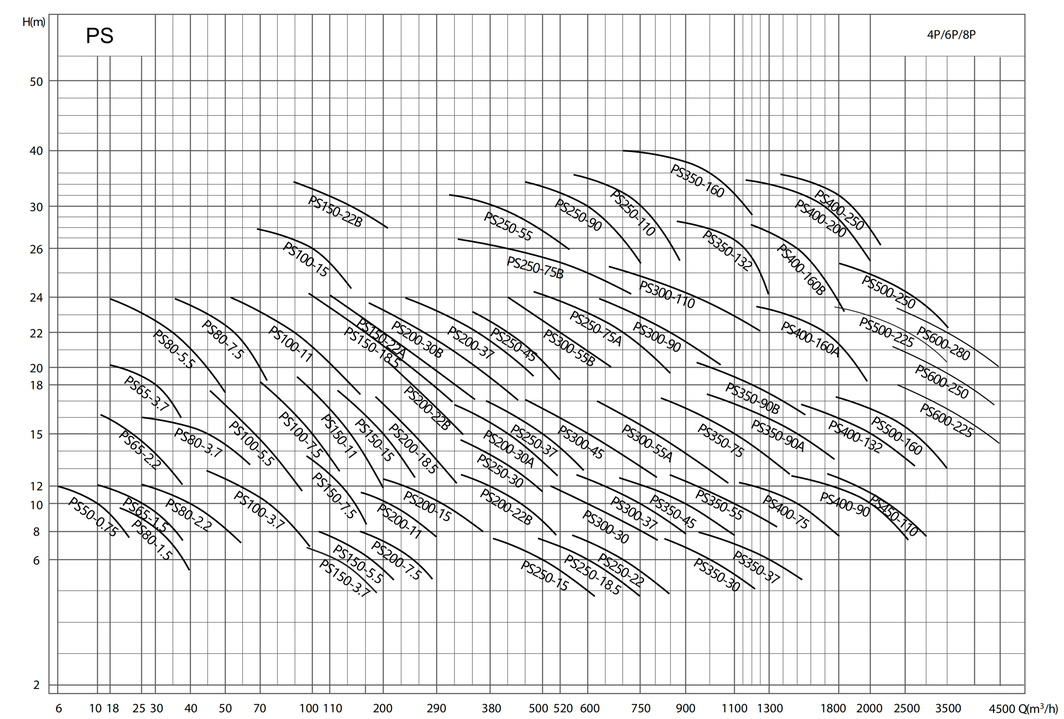

Performance parameters

2P/4P

Pump model	Speed (r/min)	Capacity (m^3/h)	Head (m)	Eff. (%)	Motor power (kw)	Dia. (mm)	Weight (kg)
PS50-0.75	2900	10	10	58	0.75	50	30
PS50-1.5	2900	18	15	60	1.5	50	33
PS50-2.2	2900	15	22	53	2.2	50	50
PS50-2.2A	2900	6	25	30	2.2	50	52
PS50-3.7	2900	18	30	50	3.7	50	62
PS50-5.5	2900	15	40	43	5.5	50	68
PS65-3.7	2900	30	22	62	3.7	65	66
PS65-5.5	2900	28	30	58	5.5	65	70
PS65-7.5	2900	25	40	45	7.5	65	120
PS80-5.5	2900	35	22	55	5.5	80	88
PS80-7.5	2900	38	30	53	7.5	80	128
PS80-11	2900	45	40	60	11	80	180
PS80-15	2900	50	45	51	15	80	210
PS100-11	2900	65	30	66	11	100	219
PS100-15	2900	80	30	58	15	100	220
PS50–0.75	1450	10	10	50	0.75	50	50
PS65–1.5	1450	25	10	60	1.5	65	60
PS80–1.5	1450	30	8.5	60	1.5	80	60
PS65–2.2	1450	23	15	60	2.2	65	70
PS80–2.2	1450	40	10	60	2.2	80	70
PS65–3.7	1450	30	18	55	3.7	65	130
PS80–3.7	1450	45	15	62	3.7	80	130
PS100–3.7	1450	75	10	70	3.7	100	130
PS80–5.5	1450	35	22	55	5.5	80	180
PS100–5.5	1450	95	12	68	5.5	100	200
PS150–3.7	1450	130	6	73	3.7	150	208
PS150–5.5	1450	180	6	73	5.5	150	210
PS80–7.5	1450	55	22	62	7.5	80	200
PS100–7.5	1450	100	15	70	7.5	100	250
PS150–7.5	1450	130	12	70	7.5	150	230
PS200–7.5	1450	250	6	72	7.5	200	230
PS100–11	1450	90	22	68	11	100	295
PS150–11	1450	145	15	72	11	150	270
PS200–11	1450	210	10	70	11	200	270
PS100–15	1450	100	26	65	15	100	300
PS150–15	1450	200	15	74	15	150	300
PS200–15	1450	300	10	72	15	200	300
PS250–15	1450	500	6	71	15	250	460

Performance parameters

4P/6P/8P

Pump model	Speed (r/min)	Capacity (m^3/h)	Head (m)	Eff. (%)	Motor power (kw)	Dia. (mm)	Weight (kg)
PS200–18.5	1450	250	15	75	18.5	200	350
PS150–18.5	1450	170	22	73	18.5	150	350
PS250–18.5	1450	600	6	71	18.5	250	520
PS150–22A	1450	200	22	73	22	150	380
PS150–22B	1450	135	30	69	22	150	380
PS200-22A	1450	250	18	72	22	200	380
PS200-22B	1450	450	10	72	22	200	380
PS250–22	1450	700	6	73	22	250	650
PS200–30A	980	420	15	76	30	200	950
PS200–30B	980	280	22	74	30	200	900
PS250–30	980	460	13	75	30	250	980
PS300–30	980	600	10	75	30	300	1500
PS350–30	980	1000	6	75	30	350	1500
PS200–37	980	350	22	75	37	200	1100
PS250–37	980	500	15	77	37	250	1450
PS300–37	980	750	10	77	37	300	1550
PS350–37	980	1300	6	77	37	350	1550
PS250–45	980	420	22	76	45	250	1500
PS300–45	980	600	15	78	45	300	1600
PS350–45	980	900	10	75	45	350	1650
PS250–55	980	520	22	78	55	250	1600
PS300-55A	980	800	15	79	55	300	1650
PS300-55B	980	520	22	75	55	300	982
PS350–55	980	1100	10	75	55	350	1700
PS250-75A	980	700	22	78	75	300	1710
PS250-75B	980	500	30	76	75	250	1650
PS350–75	980	1100	15	78	75	350	1800
PS400-75	990	1500	10	80	75	400	1436
PS250-90	990	600	30	70	90	250	2000
PS300-90	980	850	22	79	90	300	1800
PS350-90A	990	1200	18	78	90	350	2000
PS350-90B	990	1500	15	80	90	350	2000
PS400-90	980	2000	10	80	90	400	1250
PS250-110	990	700	33	73	110	250	2200
PS300-110	990	950	24	80	110	300	2200
PS450-110	990	1500	15	80	90	350	2000
PS350-132	740	1085	28	67	132	350	2500
PS400-132	740	2000	15	72	132	400	2520
PS350-160	740	1000	36	61	160	350	2880
PS400-160A	740	1500	26	72	160	400	2880
PS400-160B	740	1700	22	64	160	400	2880
PS500-160	740	2600	15	78	160	500	2880
PS400-200	740	1700	30	67	200	400	3850
PS500-225	735	2500	22	78	225	500	3850
PS600-225	585	3800	16	81	225	600	3850
PS500-250	735	3400	20	80	250	600	4690
PS600-250	735	3400	20	77	250	600	4880
PS600-280	735	3500	22	77	280	600	5260