- **Working parameters:**
  Voltage： AC100V~240V (50/60Hz)
  Rated power: N18H: 180W
  Maximum Ambient Temperature：40°

- **Light parameters:**
  Case : a full set of aluminum alloy (high temperature resistance), fine sand paint (high-end wear-resistant)
  Display: touch screen +4 buttons, supports 30s instant blackout and light on
  Power interface: one in(Blue) one out(White) powercon
  Signal interface: 3 pin(5 pin for optional) ,one in one out
  Waterproof grade: IP20
  Net Weight:2.7KG

Size：

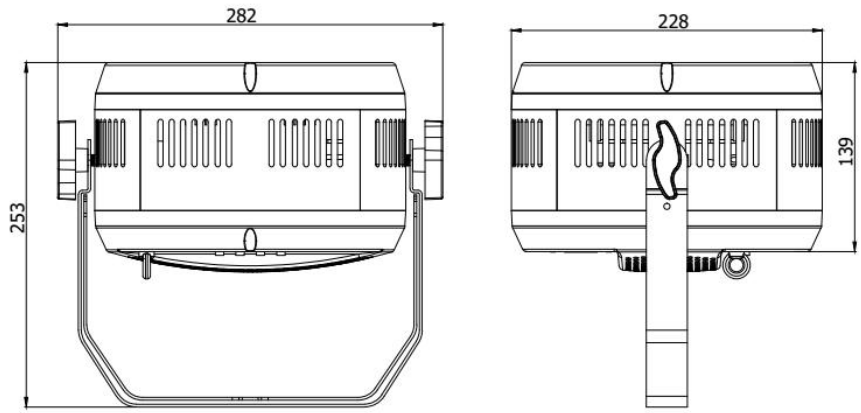

HUANGHE 黄河灯光® YELLOWRIVER LIGHTING

18PCS 6IN1 PAR LIGHT(Item: YR-N18H)

Instruction

(Please read the manual carefully before using the product.)

User Manual

Attention：

Any damage caused by ignoring this manual does not belong to the scope of the warranty, and the manufacturer does not bear any responsibility for all consequences and problems caused by this. Please note that the damage caused by violation of the operating procedures is not within the scope of the warranty.

1. Technical specification：

Light Source: N18H:18x10W(6IN1)

- **Beam angle:** 25°
- **Control parameters**

Strobe：0-20Hz
Dimmer: linear 0-100% standard dimmer
Control: DMX512, RDM
Channel: 8CH/11CH
Built-in programming: 3 strobe +31 static mixed color +4 auto
Control mode: DMX512, manual, master-slave, voice control
Noise: Intelligent temperature, active heat dissipation,
silent below 40 degrees,fan begin to work when temperature above 40 degrees. maximum noise is 43.0dBA from 1 meter away (close to ambient noise),you can choose to turn off fan and use silent mode without any noise , but power will reduce according to temperature to keep led lamp safe when temperature above 80 degree.
Over temperature protection: half power protection when temperature over 80 degrees
Real-time monitoring: Light source temperature, signal display.

6. When using device, only 20 sets of the same product can be controlled within 20 meters of the same signal line . If it exceeds this range, a signal amplification device must be used to amplify the signal before it can be used, and the DMX output port on the last lamp Install a terminal product and solder a 120 ohm 1/4W resistor between Pin2 and Pin3 .
7. The input power cord of this equipment is equipped with a specification of 1 square meter. When the outer skin of the power cord is exposed and damaged, a new power cord of the same specification must be replaced.
8. When the light source reaches its end of life, the entire lamp should be replaced.
9. The continuous use time of the equipment cannot exceed 8 hours each time .
10. The power cord of the same input terminal can connect up to 4 lamps.
11. The lens and light source of this equipment must be used together. When any accessory is damaged, it must be replaced by a relevant professional before it can be used.

7.Installation requirements:

1. In the environment where this product is used, there should be no corrosive steam and gas, and no flammable and explosive materials.
2. Keep the distance between the light outlet of the lamp and the illuminated object at least 1 meter, and keep it away from moisture and corrosive gases.
3. When the product is suspended and installed, the load of the hanging parts should be more than 3 times the weight of the product , and an auxiliary suspension safety rope should be made on the product, and the load of the safety rope should be more than 3 times the weight of the product .

The company reserves the right to modify this product manual without notice.

8 Channels：

S/N	Function	Description
Channel 1	Total dimming	0-255 : Total dimming linear dimming , from Dark to Bright.
Channel 2	Red	0-255 : Red linear dimming, from Dark to Bright.
Channel 3	green	0-255 : Green linear dimming, from Dark to Bright.
Channel 4	blue	0-255 : Blue linear dimming, from Dark to Bright.
Channel 5	white	0-255 : White linear dimming, from Dark to Bright.
Channel 6	Amber	0-255：Amber linear dimming, from the Dark to Bright.
Channel 7	Purple	0-255：Purple linear dimming, from the Dark to Bright.
Channel 8	Strobe	0: invalid; 1-84:lighting stroboscopic;85-169:random stroboscopic; 170-255: standard stroboscopic.

5.Master-Slave Control Model：

Master and slave: Set up one fixture as Master fixture(triggering), other fixtures as slave fixtures(the DMX menu, and the address code must be 001) , Slave fixtures under DMX add. Connect the signal cable, the slave fixtures will run and keep function synchronism as master fixtures.

Console to fixtures: Set up all fixtures same or different address value or follow DMX console performance. Connecting to console using signal cable, fixture is controlled by console.

6. Instructions and remarks :

1, Always make sure that you are connecting to the proper voltage and that the line voltage you are connecting to is not higher than that stated on the decal or rear panel of the fixture.

2, When using this equipment, the power cord must be well grounded and taken care of by professionals.

3, Do not touch its surface when operating

4. The internal components of this equipment must be purchased from the manufacturer.

5. When using console, try to avoid neighboring interference sources. (Example: wireless walkie-talkie, high-frequency emission source, etc.)

2.Operation Instruction

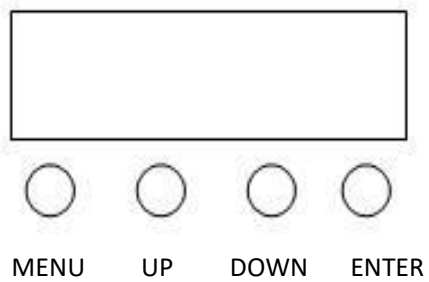

Press the MENU key to cycle through 12 different menus. Press the ENTER key to enter the corresponding menu, press UP (plus key) or DOWN (minus key) to modify the current value. Press the ENTER key to save the current value.

3.Menu function reference table :

S/N	Function	Description
1	d — — —	DMX512 address code setting: 001-512 , when there is a signal connection, the lower right corner indicator lights up
2	r — — —	Red brightness adjustment: 0-255
3	G — — —	Green brightness adjustment: 0-255
4	b — — —	Blue brightness adjustment: 0-255
5	n — — —	White brightness adjustment: 0-255
6	A — — —	Amber brightness adjustment: 0-255
7	P — — —	Purple brightness adjustment: 0-255
8	F — — —	Stroboscopic/speed adjustment: 0 invalid; 1-84 lighting stroboscopic; 85-169 random stroboscopic; 170-255 standard stroboscopic.

9	Pr——	PR01 Red；PR02 Green；PR03 Blue；PR04 White；PR05 Amber；PR06 Purple； PR07 Red + Green;PR08 Red + Blue;PR09 Red + White;PR10 Red + Amber;PR11 Red + Purple;PR12 Green + Blue;PR13 Green + Amber;PR14 Green + Purple;PR15 Green + White;PR16 Blue + White;PR17 Blue + Amber;PR18 Blue + Purple;PR19 Red + Green + Amber;PR20 Red + Green + Blue;PR21 Red + Green + White;PR22 Red + Blue + White;PR23 Red + Blue + Amber;PR24 Red + Green + Purple;PR25 Red + Blue + Purple;PR26 Green + Blue + White;PR27 Green + Blue + Amber;PR28 Green + Blue + Purple;PR29 Red + Green + Blue + White;PR30 Red + Green + Blue + White + Amber;PR31 Red + Green + Blue + White + Amber + Purple.PR32 jump;PR33 gradient;PR34 stroboscopic;PR35 Comprehensive effects.
10	SP——	Built-in program speed setting: SP01-16
11	AU——	Auto/Audi：auto/ voice control
12	FAN—	FAN0: only if 40 degree ,fan working；FAN1: silent mode,fan not working but power will reduce according to temperature to keep led lamp safe when temperature above 80 degree.；FAN2:fan always working
13	dp——	dp0/1：30s instant blackout and light on
14	CH——	CH11/CH8：Channel selection

4.DMX512 channel description:

11 Channels：

S/N	Function	Description
Channel 1	Total dimming	0-255 : Total dimming linear dimming , from Dark to Bright.
Channel 2	Red	0-255 : Red linear dimming, from Dark to Bright.
Channel 3	green	0-255 : Green linear dimming, from the Dark to Bright.
Channel 4	blue	0-255 : Blue linear dimming, from the Dark to Bright.
Channel 5	white	0-255 : White linear dimming, from the Dark to Bright.
Channel 6	Amber	0-255：Amber linear dimming, from the Dark to Bright.
Channel 7	Purple	0-255：Purple linear dimming, from the Dark to Bright.
Channel 8	Strobe	0: invalid; 1-84: lighting stroboscopic; 85-169: random stroboscopic; 170-255: standard stroboscopic.
Channel 9	Color preset	0 invalid, 1-7 Red;8-15 Green;16-23 Blue;24-31 White;32-39 Amber;40-47 Purple;48-55 Red+Green;56-63 Red+Blue;64-71 Red+White;72-79Red+Amber;80-87Red+Purple;88-95Green+Blue;96-103Green+Amber;104-111Green+Purple;112-119Green+White;120-127Blue+White;128-135Blue+Amber;136-143Blue+Purple;144-151Red+Green+Amber;152-159 Red+Green+Blue;160-167 Red + Green + White;168-175 Red + Blue + White;176-183 Red + Blue + Amber;184-191 Red + Green + Purple;192-199 Red + Blue + Purple;200-207 Green + Blue + White;208-215 Green + Blue + Amber;216-223 Green + Blue + Purple;224-231 Red + Green + Blue + White; 232-239 Red + Green + Blue + White + Amber;240-255 Red + Green + Blue + White + Amber + Purple.
Channel 10	Static mixing color + Auto	0-20 invalid; 21-25 Red; 26-31 Green; 32-37 Blue; 38-43 White; 44-49 Amber; 50-55 Purple; 56-61 Red+Green; 62-67 Red+Blue; 68 -73 Red + White; 74-79 Red + Amber; 80-85 Green + Blue; 86-91 Green + Amber; 92-97 Green + Purple; 98-103 Green + White; 104-109 Blue + White; 110- 115 Blue+Amber; 116-121 Blue+Purple; 122-127 Red+Green+Amber; 128-133 Red+Green+Blue; 134-139 Red+Green+White; 140-145 Red+Blue+White; 146- 151 Red+Blue+Amber; 152-157 Red+Green+Purple; 158-163 Red+Blue+Purple; 164-169 Green+Blue+White; 170-175 Green+Blue+Amber; 176-181 Green+Blue+ Purple; 182-187 Red+Green+Blue+White; 188-193 Red+Green+Blue+White+Amber; 194-199 Red+Green+Blue+White+Amber+Purple; 200-205 jump; 206-211 Gradient; 212-217 strobe; 218-255 mixed effect.
Channel 11	Speed of Auto	0-255 : Auto speed adjustment, from fast to slow.